SINGLE FAMILY/TOWNHOME RESIDENTIAL BUILDING PERMIT GUIDELINES

The following information is required for building permit application:

A) BUILDING PERMIT REQUIREMENTS

1. A completed and signed **New One & Two Family Residence Application**. The residence application form has consolidated two other application forms: Land Disturbance Permit Application and the Work Within the Right of Way permit application. The application must be completed by a person authorized on the **Contractor Registration Form.** Permits Can also be applied for online through the portal. Citizenserve.com/shawnee
2. A **pre-construction stake plot plan**, sealed by a Kansas Registered land surveyor. The plot plan must show the proposed building including decks, and must meet the Development Services requirements as stated in Section D.
3. **Electronic copy of building plans sealed by a Kansas registered architect or engineer**. Plans must show details as described in the attached **Minimum Plan Information for One & Two Family Dwellings** packet, included in this guideline.
4. Building Codes Division must have on file a completed, notarized **Contractor Registration Form.**
5. The permit applicant must have a valid class **A, B, or C Johnson County contractors license** (Call 913-715-2233 or www.jocogov.org for information). In addition, a valid Shawnee **Business license** is required for all contractors working in the City of Shawnee (Contact the Marry Crissman at 913-742-6247).
6. A **sewer or septic permit** for the project location with the permit application. (**Sewer Permit** -Johnson County Wastewater, 11811 S. Sunset Drive, Suite 2500, Olathe, KS 66061, Telephone 913.715.8520). (**Septic Permit** - Johnson County Environmental Dept., 11811 S. Sunset Drive, Olathe, KS 66061, Telephone 913.715.6900)

The 2018 International Residential Code is the adopted construction code applicable to new single-family residence. The City of Shawnee amended the 2018 IRC by adding a new Section R328 Physical Security to establish minimum standards that incorporate physical security to make dwelling units resistant to unlawful entry.

The City of Shawnee has a municipal ordinance, which requires electric, telephone, and cable TV services to be underground (RE: Section 15.64.020). There are some exceptions to this requirement. Contact our office at 913.742.6010 with any questions.

B) WORK WITHIN THE RIGHT-OF-WAY PERMIT REQUIREMENTS

1. Submit a completed **New One & Two Family Residence Application.** The **Work Within The Right-of-Way Work Permit Information** located near the bottom of the above application form. The application must be completed by a person authorized on the **Contractor Registration Form.**
2. The Building Codes Division must have the applicant's **Certificate of Insurance** on file. The certificate of insurance **must meet the policy limits as shown in the table below.**
3. In addition, a $10,000 **Combined Low Impact LDP/ROW and Maintenance Bond** will also be required. The bond form is attached, and the bond principal must be in the same name as the permit applicant.
4. The work within the Right-of-Way permit fee is $80.00 which will be included in the Building permit fee.

POLICY	LIMITS
General Liability	
General Aggregate	$ 2,000,000.00
Products/Completed Operation Aggregate	$ 2,000,000.00
Body Injury and Property Damage (any one occurrence)	$ 1,000,000.00
Personal & Advertising Injury (any 1 person or organization)	$ 1,000,000.00
Fire Damage (any one fire)	$ 50,000.00
Automobile Liability	
Combined Single Limit	$ 1,000,000.00
Uninsured Motorists	$ 1,000,000.00
Workers Compensation	Statutory
Employers Liability	
Per Accident	$ 100,000.00
By Disease, each employee	$ 100,000.00
By Disease, policy limit	$ 500,000.00

C) **A Low Impact Land Disturbance Permit** is required for any land disturbance activity that involves the construction of a new roofed structure, when that structure has a projected roof area of more than 1000 square feet, and where the cumulative area of land disturbance is less than one acre. "Land Disturbance" by definition, means any activity that changes the physical conditions of land form, vegetation and hydrology, creates bare soil, or otherwise may cause erosion or sedimentation. Such activities include, but are not limited to clearing, removal of vegetation, stripping, grading, grubbing, excavating, filling, logging and storing of materials.

The Shawnee City Council adopted the new **Land Disturbance Ordinance** (in October of 2007, which affects most construction projects in the City of Shawnee. The new ordinance fulfills the City's compliance activity objectives to meet the EPA's National Pollutant Discharge Elimination System (NPDES) Phase II requirements.

The following is a summary of the permit application submittal requirements for a Low Impact Land Disturbance Permit:

- A completed **New One & Two Family Residence Application.** The **Land Disturbance Permit Application** information located in the mid section of the above application form must be completed.
- A site grading and land disturbance plan that show the complete details of all work to be done under the Low Impact Land Disturbance Permit.
- A site specific "Erosion and Sediment Control Plan" is required as part of the Low Impact Land Disturbance Permit. All erosion and sediment control measures, including a gravel construction entrance, must be in place prior to land disturbance work.
- The Low Impact Land Disturbance Permit Fee is $150.00, and is payable at the time the permit is obtained.

Please note that dirt, mud or debris in the street or right of way near your site must be cleaned up within four (4) hours of notification, or the City will clean up and bill the Low Impact Land Disturbance Permit holder. The Low Impact Land Disturbance Permit holder is responsible to install, inspect, and maintain the construction site sediment and erosion control measures.

D) DEVELOPMENT ENGINEERING REQUIREMENTS FOR PLOT PLANS

GENERAL:

Plot plans for all one and two family dwellings and all multiplex dwellings shall be prepared and submitted with the building permit application in accordance with the following requirements. Plot plans shall comply with the approved as-built grading plan for the subdivision.

APPLICABLE STANDARDS: Plot plans shall comply with the **2018 International Residential Code** and the following additional requirements.

A. Protective Slopes Adjacent to Structures

1. Downward slope shall be provided from the structure foundation to rear and side yard swales.

2. Minimum Gradients
    - Impervious Surfaces: 1/8 inch per foot (1 percent)
    - Pervious (Grass) Surfaces: Refer to Chapter 4 – Foundations, Section R401 - General, Paragraph R401.3 - Drainage of the **2018 International Residential Code.**
3. Finish grade at the foundation wall shall not be less than 6 inches below the bottom of the siding

B. Side Yard Swales and Diversion Swales
1. Side Yard Swales
    - Side yard swales shall be provided to intercept runoff from within the lot, and to convey the runoff to the rear yard swale or to the street curb and gutter.
    - Side yard swales shall be centered on the side lot line.
2. Diversion Swales
    - Diversion swales shall be provided to intercept and direct runoff around the house (structure) where all runoff from the lot is directed to the front or to the rear.
    - Diversion swales shall be located 20 feet (min.) from the house (structure).

C. Lawn Areas
1. Minimum Grade: 2 percent
2. Maximum Grade: 3 (horizontal): 1 (vertical)

D. Driveways
1. Grades Outside Street Right-of-Way
    Minimum: 1 percent
    Maximum: 15 percent
    The maximum algebraic difference in grades at the right-of-way line shall be 8 percent for crest drives and 12 percent for sag drives.

2. Driveways sloping toward the house shall be constructed in such a manner as to provide an intercepting swale or drain to capture and convey runoff away from the garage prior to connection of the driveway to the house.

E. Front Yard Grading
All front yards (area between the building line and right-of-way line) within the development shall be graded to drain toward the street unless the Development Engineer grants a variance.

PLAN REQUIREMENTS: Plot plans shall include the following information and data:

A. Format.
The maximum sheet size for plot plans shall be 11" x 17".

B. Seal
A land surveyor licensed in the state of Kansas shall seal the plot plan.

C. Certification
The plot plan shall include the following certification: "I (insert name of the land surveyor) certify this plot plan has been field verified and complies with the approved as-built grading plan dated _____, unless noted otherwise."

D. North Arrow and Scale.
1. Scale. 1"= 20'. 1" = 30' will be acceptable for lots greater than 1 acre.
2. The plot plan shall include a north arrow, legend, and list of abbreviations.

E. Lot Information.
1. Legal description of the lot including name of subdivision and plat number, and lot and block number.
2. Street address
3. Lot line dimensions
4. Building lines
5. Easements including width and type (i.e.: utility, sanitary sewer)
6. Right-of-way lines

F. House (Structure) – Plan Information
Provide the location and dimensions for the following:
1. As-staked location of structure
2. Overhangs and cantilevers
3. Distance between the structure (including cantilevered floor space) and property lines on all sides
4. Porches and decks
5. Walk-out/walk-up patios
6. Egress window wells
7. Retaining walls and wing walls
8. Driveways, public sidewalks, and curb and gutter
9. Driveway culverts including culvert length, pipe size, material, pipe gauge or class if the house is constructed on a non-curbed street
10. Existing drainage structures (curb inlets, area inlets, manholes)
11. Existing sanitary sewer manholes (upstream and downstream)
12. Existing buildings, if any, on the lot shall also be shown on the plot plan.

G. House (Structure) Elevation Information
Provide elevations for each of the following:

1. Top of foundation including elevations for all stair stepping along the foundation wall
2. Garage floor
3. Basement floor
4. Egress window sill elevation
5. Top elevation of egress window wells
6. Top and bottom elevations of retaining walls
7. Top of curb elevations at side lot line extensions, and at the centerline of the driveway
8. Driveway centerline elevation at the right-of-way line
9. Driveway culvert invert elevations
10. Top elevation of existing drainage structures
11. Top elevation of existing sanitary sewer manholes
12. Top of foundation elevation of existing structures on adjacent lots

H. Existing Grades
The plot plan shall include existing contours and spot grade elevations from the approved as-built grading plan for the subdivision. Significant discrepancies between the as-built grading plan and field information obtained during plot plan site surveys shall be indicated on the plot plan.

I. Finish Grades
Finish grade spot elevations shall be provided at the following locations:

- lot corners
- principal house corners
- building line (grade break) at side lot lines
- Right-of-way line at side lot lines

J. Drainage and Floodplain Information
Drainage and floodplain information shown on the plot plan shall include:

- storm sewer pipe and drainage structures
- flow arrows indicating the direction of runoff
- side yard swales
- diversion swale
- drainage easements

K. Engineered Plot Plans
Lots requiring engineered plot plans as indicated on the subdivision-grading plan shall include the following additional information:

1. Drainage and Floodplain Information:

    - 100-year overflow channels including location and typical section
    - rear yard swales including location and typical section
    - limits and elevation of the FEMA 100-year floodplain including map number and effective date
    - limits and elevation of the 25-year and 100-year floodplains from the Mill Creek Watershed Study, or project specific study
    - 100-year flood elevations at lot corners for lots adjacent to open- channels
    - open-channel setbacks
    - Minimum low water opening elevation (MLO) designated on the subdivision grading plan for the lot
2. Low opening elevation for the proposed house (structure)
3. Two (2) foot finish grade contours
4. Finish grade spot elevations shall be provided for the following:

    - flowlines of 100-year overflow channels at grade breaks, lot lines, and points perpendicular to structure openings
    - flowlines for rear yard swales at grade breaks and lot lines

Community Development

Building Codes Division

New One, Two and Townhome Residential Application

PROJECT INFORMATION

Project Address: _____

Type of Residence (check one):

☐ Single Family ☐ Two Family ☐ Townhome (indicate number of units) _____

Building Information (show areas in square feet)

Finished Area: Basement _____ 1st Floor _____ 2nd Floor _____ 3rd Floor _____

Unfinished Area: Basement _____ Garage _____ Covered Deck/porch _____ Deck _____

Select the Energy Efficiency compliance option to be used for this project:

☐ ERI (HERS) ☐ Prescriptive ☐ Simulated Performance

Description of Work: _____

APPLICANT INFORMATION

Check as Applicable: ☐ Contractor ☐ Owner ☐ Agent of Owner

Name of Applicant (Print) _____

Address: _____ City: _____ State: _____ Zip: _____

Phone: _____ Email: _____

Johnson County Contractors Licensing Number: _____

I acknowledge that the information contained in this application is true and correct.

Signature of Applicant: _____ Date: _____

LAND DISTURBANCE PERMIT INFORMATION

* A single or two family dwelling permit shall include a permit for low impact land disturbance and work within the right of way for utilities and public improvements. Description of Land disturbance Activities: Grade and excavate for the construction of a new roofed structure over 1000 square feet in size and grade and excavate within the right-of-way for utility connections and public improvements. Submit an **"Erosion and Sediment Control Plan"** with this application for review and approval.

Note: The Land Disturbance Permit shall expire no later than two (2) years and six (6) months from the date the building permit is issued for the construction of the new roofed structure, or at the issuance of a certificate of occupancy for the structure, whichever occurs first. The area of land disturbed is assumed to be the entire project lot unless the submitted plan shows the specific area of disturbance.

WORK WITHIN THE RIGHT OF WAY PERMIT INFORMATION

Does the Street in front of the project have curbs? ☐ YES ☐ NO If NO, attach drainage calculation for sizing the driveway cu

CITY INFORMATION

Permit applications and design documents shall be submitted to the Building Codes Division, located in the lower level of the west wing of City Hall (11110 Johnson Drive Shawnee KS 66203). Building permits may also be applied for online through citizenserve.com/shawnee.

CITY OF SHAWNEE, KANSAS
CONTRACTOR REGISTRATION FORM
RESIDENTIAL CONSTRUCTION

Each builder/contractor seeking to obtain a building permit shall be required to have on file with the Code Official a current Contractor Registration Form. Instructions for completion of this form are included on the reverse side.

Business Name _____

Business Address_____ City_____ State_____ Zip_____ Phone_____

Cell Phone/Pager _____

LIST OF ALL OWNERS OR PRINCIPALS IN THE BUSINESS WHO ARE TAKING LEGAL RESPONSIBILITY FOR COMPLIANCE WITH THE CONDITIONS OF THE BUILDING PERMITS ISSUED IN THE NAME OF THE BUSINESS.
Each person listed must sign the acknowledgment statement below their name.
(Names may be submitted on a separate notarized list.)

NAME - Including attached copy of driver's license or state identification card.	**BUSINESS ADDRESS**	**HOME ADDRESS**	
(print name)			

I, _____, agree to be legally responsible for compliance with all the laws, regulations, ordinances, and conditions of
(Signature)
the building permit imposed by the City of Shawnee, Kansas, pertaining to permits issued to this business.

(print name)			

I, _____, agree to be legally responsible for compliance with all the laws, regulations, ordinances, and conditions of
(Signature)
the building permit imposed by the City of Shawnee, Kansas, pertaining to permits issued to this business.

(print name)			

I, _____, agree to be legally responsible for compliance with all the laws, regulations, ordinances, and conditions of
(Signature)
the building permit imposed by the City of Shawnee, Kansas, pertaining to permits issued to this business.

I, _____, swear and affirm that the information provided is true and correct and the
(Print name of the owner or principal completing this form.)
undersigned has read the attached documents.

WARNING: False or misleading statements or information may cause revocation of the registration and criminal prosecution.

Signature: _____ Date: _____

State of _____, County of _____

Subscribed and sworn to before me this _____day of _____, 20 _____.

My appointment expires

_____, 20 _____. _____
Notary's Signature

(Over)

LIST OF ALL PERSONS AUTHORIZED TO MAKE APPLICATION FOR, AND OBTAIN BUILDING PERMITS ON BEHALF OF THE BUSINESS (Names may be submitted on a separate list.)	
PRINT NAME	**SIGNATURE**

CONTRACTOR REGISTRATION FORM
INSTRUCTIONS FOR COMPLETION

Each builder/contractor seeking to obtain a building permit shall be required to have a current Contractor Registration Form on file with the Code Official.

Instructions for completion:

1. The form must be executed by the owner of the business or general partner of a partnership.
2. The form shall identify the exact legal name, business name, and street address of the business and names, business address, and home address of all persons in the business who shall be legally responsible for compliance with the conditions of the permit.
3. The form shall identify the names of all persons authorized to make application for a building permit on behalf of the business, and shall provide a signature exemplar for each such individual.
4. Each person taking legal responsibility for compliance with the conditions of the building permit shall sign a statement acknowledging his/her acceptance of legal responsibility for compliance with all the *laws*, regulations, ordinances, and conditions of the building permit imposed by the City. Each person shall also provide a copy of their drivers license or state identification card. The assumption of responsibility provided for in this form shall not create or affect the rights of any third parties.

Note: Any changes to the registration information will require a complete resubmittal of the form. Applications will remain on file unless changed or removed at the request of the person who completed the form.

If you have any questions regarding completion of the form, please call 913-742-6010. Return the notarized form to:

City of Shawnee
Building Codes Division - Chief Building Official
11110 Johnson Drive
Shawnee, Kansas 66203

The Code Official is authorized to deny a permit to any applicant not meeting these requirements. All persons identified on the form as being legally responsible for compliance with the conditions of the permit may be cited by the City for any violations of the code pertaining to that permit . The business, and any identified responsible persons, shall assume full legal responsibility and liability for any permit issued to any authorized person, and absent written notification being received by the Code Official prior to the issuance of a perm it of any changes in the authorized persons, such responsibility shall exist regardless of whether in fact such listed authorized person has any affiliation with the business at the time of issuance. It is further the continuing responsibility of the business to notify the Code Official in writing of any other changes to the form, and in the absence of any such notification being received by the Code Official prior to the issuance of a permit, all identified responsible persons shall be responsible for that permit regardless of whether they maintain any affiliation with the business.

CITY OF SHAWNEE, KANSAS

LOW IMPACT PERFORMANCE AND MAINTENANCE BOND

BOND NO._____

_____, as surety ("Surety"), and _____, as principal ("Principal"), enter into and execute this Bond ("Performance Bond"), and bind themselves in favor of the City of Shawnee, as obligee ("Beneficiary"), in the initial amount of Ten Thousand and No Hundredths Dollars, ($ 10,000.00), (the "Penal Sum"). This bond shall become effective on _____ and expire sixty (60) days after the permit expires or shall automatically renew yearly until the end of the maintenance period for all Permits held.

WHEREAS, the condition of the above obligation is such that the Principal has obtained a Permit or Permits from the City for land disturbance(s) of less than one (1) acre to construct _____ (hereinafter "the Project"); a copy of said Permit(s) is made a part hereof by reference as if fully set out herein; and

WHEREAS, the Principal has submitted an Erosion and Sediment Control Plan in compliance with the Shawnee Design Manual and incorporated herein; and

WHEREAS, the Beneficiary has further required the Principal to guarantee completion of public improvements within the public right-of-way and timely restoration of the public right-of-way and of any public or private improvements damaged, disturbed, or harmed by the Project, including restoration of improved or unimproved surfaces to a neat and presentable condition, and removal of debris, excess dirt, or materials, in such a manner that the same shall endure without defects in materials and workmanship, all as required by the Erosion and Sediment Control Plan and/or Shawnee Municipal Code, (hereinafter collectively referred to and known as the "Required Restoration").

The Surety and the Principal, both jointly and severally, and for themselves, their heirs, administrators, executors, successors and assigns agree:

1) If Principal shall in all particulars promptly and faithfully perform each and every covenant, condition, and part of the Project in accordance with the terms of the Erosion and Sediment Control Plan and/or Shawnee Municipal Code, then this obligation shall be and become null and void; otherwise it shall remain in full force and effect.

2) For work performed in the right-of-way, if Principal shall construct, or cause to be constructed, the public improvements set forth in said permit; and complete, or cause same to be completed within the time specified on the permit for such completion; and construct same according to the plans for the improvement; and restore the right-of-way in accordance with the technical specifications used by the City, subject to the approval and acceptance of the City Engineer; and construct same with such materials and in such manner that same shall endure without need for any repairs for a period of two (2) years from and after acceptance thereof by the City Engineer and if the public improvement and restoration of the right-of-way endures without the need of repairs for this specified period, then this obligation shall be null and void;

otherwise, this obligation shall remain in full force and effect until its release by the City Engineer.

3) If Principal fails to perform and abide by any such obligations hereunder in any respect or if the Project requires repairs or maintenance within such (2) year period then the Surety shall either promptly remedy such failure to the satisfaction of the City or shall within fourteen (14) days from the date of written notice from the City pay to City sufficient funds to pay the cost of such compliance and other costs and damages for which the Surety may be liable hereunder, including but not limited to the costs of consultants and/or engineering investigations, testing, analysis and any other costs incurred to determine the cause of defect and/or the necessary repair and maintenance and attorney fees incurred in the collection of this Bond.

4) All notices to the Surety, the Principal or the Beneficiary must be delivered in person or otherwise given in writing to such party at the following address set forth below:

SURETY

Name: _____
Attention: _____
Street: _____
City, State,
ZIP: _____ Fax _____

PRINCIPAL

Name: _____
Attention: _____
Street: _____
City, State,
ZIP: _____ Fax _____

BENEFICIARY

City of Shawnee, Kansas
City Hall
Attn:_____
11110 Johnson Drive
Shawnee, Kansas 66203

5) This bond may be terminated at any time by the Surety upon sending notice in writing to the Principal and Beneficiary and at the expiration of thirty (30) days from the mailing of said notice, this bond shall terminate and the Surety shall thereupon be relieved from any liability for any acts or omissions of the Principal subsequent to that date.

6) This Low Impact Performance and Maintenance Bond shall be governed by, and construed solely in accordance with, the laws of the State of Kansas without regard to its conflict of laws provisions.

7) In the event any legal action shall be filed upon this Low Impact Performance and Maintenance Bond, venue shall lie exclusively in the District Court of Johnson County, Kansas.

IN TESTIMONY WHEREOF, said Principal has hereunto set his/her hand, and said Surety has caused these presents to be executed in its name; and its corporate seal to be hereunto affixed by its attorney-in-fact duly authorized thereunto so to do at

_____ ,

on this, the _____ day of _____, 20__.

Principal	**Surety**
_____ _____ (Typed Firm Name)	_____ (Typed Firm Name)
_____ _____ (Seal)	_____ (Seal)
By:	By:
_____ _____ (Signature)	_____ (Signature)
_____ _____ (Printed Name)	_____ (Printed Name)
_____ _____ (Title)	_____ (Title)
_____ _____ (Address)	_____ (Address)
_____ _____ (Phone Number)	_____ (Phone Number)
_____ _____ (Date of Execution)	_____ (Date of Execution)

(Accompany this bond with Attorney-in-Fact's authority from the Surety Company certified to include the date of the bond.)

ACORD®

CERTIFICATE OF LIABILITY INSURANCE

DATE (MM/DD/YYYY)

PRODUCER

INSURED

THIS CERTIFICATION IS ISSUED AS A MATTER OF INFORMATION ONLY AND CONFERS NO RIGHTS UPON THE CERTIFICATE HOLDER. THIS CERTIFICATE DOES NOT AMEND, EXTEND OR ALTER THE COVERAGE AFFORDED BY THE POLICIES BELOW.

INSURERS AFFORDING COVERAGE	NAIC #
INSURER A:	
INSURER B:	
INSURER C:	
INSURER D:	
INSURER E:	

COVERAGES

THE POLICIES OF INSURANCE LISTED BELOW HAVE BEEN ISSUED TO THE INSURED NAMED ABOVE FOR THE POLICY PERIOD INDICATED. NOTWITHSTANDING ANY REQUIREMENT, TERM OR CONDITION OF ANY CONTRACT OR OTHER DOCUMENT WITH RESPECT TO WHICH THIS CERTIFICATE MAY BE ISSUED OR MAY PERTAIN, THE INSURANCE AFFORDED BY THE POLICIES DESCRIBED HEREIN IS SUBJECT TO ALL THE TERMS, EXCLUSIONS AND CONDITIONS OF SUCH POLICIES. AGGREGATE LIMITS SHOWN MAY HAVE BEEN REDUCED BY PAID CLAIMS.

INSR LTR	ADD'L INSRD	TYPE OF INSURANCE	POLICY NUMBER	POLICY EFFECTIVE DATE (MM/DD/YY)	POLICY EXPIRATION DATE (MM/DD/YY)	LIMITS	
		GENERAL LIABILITY				EACH OCCURRENCE	$
		COMMERCIAL GENERAL LIABILITY				DAMAGE TO RENTED PREMISES (Ea occurence)	$
		CLAIMS MADE / OCCUR				MED EXP (Any one person)	$
						PERSONAL & ADV INJURY	$
						GENERAL AGGREGATE	$
		GEN'L AGGREGATE LIMIT APPLIES PER:				PRODUCTS - COMP/OP AGG	$
		POLICY / PRO-JECT / LOC					$
		AUTOMOBILE LIABILITY				COMBINED SINGLE LIMIT (Ea accident)	$
		ANY AUTO					
		ALL OWNED AUTOS				BODILY INJURY (Per person)	$
		SCHEDULED AUTOS					
		HIRED AUTOS				BODILY INJURY (Per accident)	$
		NON-OWNED AUTOS					
						PROPERTY DAMAGE (Per accident)	$
		GARAGE LIABILITY				AUTO ONLY - EA ACCIDENT	$
		ANY AUTO				OTHER THAN AUTO ONLY: EA ACC	$
						AGG	$
		EXCESS/UMBRELLA LIABILITY				EACH OCCURRENCE	$
		OCCUR / CLAIMS MADE				AGGREGATE	$
							$
		DEDUCTIBLE					$
		RETENTION $					$
		WORKERS COMPENSATION AND EMPLOYERS' LIABILITY				WC STATU-TORY LIMITS / OTH-ER	
		ANY PROPRIETOR/PARTNER/EXECUTIVE OFFICER/MEMBER EXCLUDED? If yes, describe under SPECIAL PROVISIONS below				E.L. EACH ACCIDENT	$
						E.L. DISEASE - EA EMPLOYEE	$
						E.L. DISEASE - POLICY LIMIT	$
		OTHER					

DESCRIPTION OF OPERATIONS / LOCATIONS / VEHICLES / EXCLUSIONS ADDED BY ENDORSEMENT / SPECIAL PROVISIONS

CERTIFICATE HOLDER

CANCELLATION

SHOULD ANY OF THE ABOVE DESCRIBED POLICIES BE CANCELLED BEFORE THE EXPIRATION DATE THEREOF, THE ISSUING INSURER WILL ENDEAVOR TO MAIL _____ DAYS WRITTEN NOTICE TO THE CERTIFICATE HOLDER NAMED TO THE LEFT, BUT FAILURE TO DO SO SHALL IMPOSE NO OBLIGATION OR LIABILITY OF ANY KIND UPON THE INSURER, ITS AGENTS OR REPRESENTATIVES.

AUTHORIZED REPRESENTATIVE

© ACORD CORPORATION 1988

IMPORTANT

If the certificate holder is an ADDITIONAL INSURED, the policy(ies) must be endorsed. A statment on this certificate does not confer rights to the certificate holder in lieu of such endorsement(s).

If SUBROGATION IS WAIVED, subject to the terms and conditions of the policy, certain policies may require an endorsement. A statement on this certificate does not confer rights to the certificate holder in lieu of such endorsement(s).

DISCLAIMER

The Certificate of Insurance on the reverse side of this form does not constitute a contract between the issuing insurer(s), authorized representative or producer, and the certificate holder, nor does it affirmatively or negatively amend, extend or alter the coverage afforded by the policies listed thereon.

ENGINEERING INSPECTION (E/I) LOT REQUIREMENTS

The homebuilder shall retain the services of a professional surveyor licensed in the state of Kansas to complete an inspection of those lots designated "E/I" on the subdivision grading plan. The following items shall be inspected by the surveyor:

	Construction Tolerance
• Open channel setback distance	- 1.00 foot
• Top of foundation elevation	+/- 0.10 foot
• Minimum low opening elevation	+/- 0.10 foot
• Grading adjacent to structure foundation	+/- 0.10 foot
• 100-year overflow channel flow line elevation and cross-section	+/- 0.30 foot
• Rear yard swale flow line elevation and cross-section	+/- 0.30 foot
• Grading within the right-of-way	¼- ½ inch per foot
• Side yard swales and diversion swales	+/- 0.30 foot
• Rear lot corners	+/- 0.30 foot
• Overall lot grading	+/- 0.30 foot

The surveyor shall prepare an as-built drawing of the lot based on the results of the inspection. The surveyor shall seal the as-built drawing, and provide the following certification:

"I certify the house (structure) and lot, as constructed and graded, substantially complies with all applicable building codes, grading, and drainage standards."

The homebuilder shall submit the as-built drawing and certification to Codes Administration. The final certificate of occupancy for the house (structure) will not be issued until the as-built drawing and certification is submitted to Codes Administration.

Minimum Plan Information for One & Two-Family Dwellings

The following information is required to be shown on plans submitted for permit:

1. General

   a. The minimum size of paper used for plans shall be 18" x 24" for single family detached and duplexes and 11" x 24" for additions. All floor plans shall be a minimum of 1/4" scale and elevations a minimum of 1/8" scale

   b. Plans submitted after July 1, 2019 should reflect compliance with the 2018 International Residential Code (IRC), and the City of Shawnee Municipal Code. A copy of the City of Shawnee Municipal Code section that adopts and amends the IRC can be found at www.cityofshawnee.org.

   c. A electronic set of plans will be required. One full set of plans will be stamped approved and returned, and one full set will be retained in the Building Code Division. It will be the building permit holders responsibility to take the City Approved plans to the site for utilization during the inspections.

   d. A registered design professional (architect or engineer), licensed in the state of Kansas, shall seal each page of all plans. In lieu of sealed plans, the plans can be accompanied by a sealed affidavit from a registered design professional licensed in the state of Kansas indicating his/her review and compliance. Please use the attached Plan Certification Statement Affidavit form.

   e. Plans are not required for electrical wiring, plumbing system, or mechanical ductwork.

   f. If any changes or deviations from the plans are made during construction, the contractor shall notify the Shawnee Building Codes Division. The Building Codes Division may require revised drawing or calculations at its discretion.

2. Foundation Plan. This is a plan, drawn to scale, showing the proposed building footings and foundations, and is to include the following information:

a. A plan view of the building foundation system. Stepped foundation wall locations and details must be included.

b. Details showing the required anchor bolts, required top of wall restraint, and any special hold down anchors locations and types.

c. Plan shall indicate by note that all footings meet or exceed a minimum frost depth of 36 inches.

d. Unless indicated on plans, assumed allowable soil bearing values will be 2,000 psf.

e. Show the footing dimensions and footing reinforcement to be provided.

f. Indicate foundation wall height, thickness, and required reinforcement.

g. Show, or indicate by note, basement slab thickness and reinforcement required.

h. Show the location and details of the required basement egress and rescue opening.

The 2018 International Residential Code (IRC) Section R404 has significant revisions to the requirements for the construction of concrete foundation walls, including requiring use of 60 #/cubic foot as the equivalent fluid pressure for soil types in Shawnee, anchor bolt spacing at 7" on center and anchor clips for floor joists to provide top of wall restraint, and significant increases in required reinforcing steel.

The IRC also allows foundation walls to be constructed based on design using ACI 318-05, or ACI 332-05, or other approved structural standards. The City of Shawnee accepts the "Residential Foundation Guideline" published by Johnson County as an approved structural standard. This guideline is available at the Building Codes office, or can be found at the following Johnson County website: http://jocobo.jocogov.org

Contractors choosing to use the prescriptive requirements found in the Residential Foundation Guideline, or those found in Chapter 4 of the IRC, may submit plans prepared by a Kansas Registered design professional. Those plans should include foundation design details, top of wall restraint details, and structural calculations. A site specific soil test, conducted by an approved agency, using an approved method, will be required for designs that use less than 60 #/cubic foot as the equivalent fluid design pressure.

3. Floor Plans. These are plans, drawn to scale, showing each of the proposed building floors, and are to include the following features/information:

a. A plan view of each floor of the building, including the basement.

b. Provide dimensions for each room and architectural feature (hallways, stairways, etc.).

c. Total square footage of each floor level and basement area.

d. Use of rooms. Note on plans for each room (including basements).

e. Show size and spacing of proposed floor and ceiling framing members, provide grade and species of lumber, or indicate minimum allowable Fb, and modules of elasticity, E, to be used for framing members. Provide dimensions and/or specifications for other types of structural elements used (steel framing, LVL's, glulams, etc.). (Framing information may be shown on floor plans or on separate framing plans.)

f. Show types of fasteners, such as bolts, for flitch beams or beams using multiple 2X lumber.

g. If pre-engineered wood trusses are used in floor framing, provide truss drawings, which identify member sizes to be used. Wood trusses shall be designed in accordance with approved engineering practice. (See attached "Residential Truss Submittal Guidelines".)

h. For a structural reinforced concrete floor over a usable area, such as a garage floor located over a storage area or basement floors on more than 24" of gravel backfill, submit engineered details. Calculations may be required.

4. Roof Plan. These are plans, drawn to scale, showing the proposed roof covering and framing, and are to include the following features/information:

a. A note that the roof is designed for 20 psf roof snow load as a minimum.

b. Type of roof covering to be used, with design dead load.

c. Show size and spacing of proposed roof framing members; provide grade and species of lumber, or indicate minimum Fb and E to be used for framing members. Provide dimensions and/or specifications for other types of structural elements used (steel framing, LVLs, glulams, etc.).

d. The locations of all purlins, struts, hip valley and ridge bracing points; bearing wall locations below, which support point loads from roof.

e. If pre-engineered wood trusses are used in roof framing, provide sealed truss drawings. (See attached "Residential Truss Submittal Guidelines".)

5. Exterior Elevations. These are plans, drawn to scale, showing the proposed building as viewed from each side and are to include the following features/information:

a. Exterior wall openings. Size and location of doors and windows.

Note: Basement wall elevations will not be required to allow for various site

conditions that may be encountered.

b. Show size and spacing of wall framing members; provide grade and species of lumber of indicate minimum Fb to be used for framing members. Provide dimensions and/or specifications for other types of structural elements used. (Framing information may be shown on elevations, floor plans, or on separate framing plans.)

Note: Studs in walls which are not more that 10 feet in height shall be spaced not more that is specified in IRC Table No. R-602.3(5) for the corresponding stud size. Those studs in walls greater than 10 feet in height shall be spaced no more than is specified in IRC Table R-602.3.1, or shall be designed by a professional engineer or architect licensed in the state of Kansas. Calculations may be required.

c. Note on plans the required corner bracing method, when walls are less than 4 feet wide at corners (walls which do not comply with conventional bracing as described in IRC R602.10.3). The construction details of the alternate bracing method and the required connections to foundations must be shown on the plans.

6. Details and Notes. Details or drawings of portions of buildings showing in greater detail how specific areas of the building are constructed; notes are added to drawings and details clarifying how building code requirements are met in certain instances; and details and notes are to address the following feature information:

a. Windows. Note where safety glazing is to be installed; note size, location, and type of windows used to satisfy bedroom egress requirements.

b. Stairs. Note rise, run, head clearance, and width; provide details for special stairs, e.g., spiral and winders.

c. Dwelling unit separations. Provide detail or note of proposed construction for fire separation wall between duplex units and/or townhouse units. Design numbers of fire resistance-rated assemblies are to be provided.

d. Garage separation. Provide detail or note of proposed construction between attached garage and living space in the dwelling. (No openings are allowed between bedrooms and garage area.)

e. Structural details.

1. Provide sufficient details and/or sections to show the transfer of roof, ceiling, and floor loads through the various structural elements in the building. Identify all load-bearing walls.

2. Provide sufficient details to clearly demonstrate the structural adequacy in such situations as offset bearing walls, cantilevered beams, vaulted ceilings, stairways, decks attached to

cantilevered floor joists, and fireplace bays.

3. Provide thickness and required reinforcement for any concrete slabs that have backfill material that exceeds 24 inches of compacted sand or gravel, or 8 inches of earth (typically, all garage floor slabs). For basement slabs and garage slabs, this may entail a design, which includes a combination of grade beams, piers, reinforced slab, and pier footing designed to sustain required live loads. Structural slabs are to be designed by a registered architect or professional engineer licensed in the state of Kansas.

4. Note on the plans the size and type of all beams, headers, and columns used. The type of column supporting steel I-beams must be detailed <u>at all bearing points</u>.

5. Note on plans the required corner bracing method, when walls are less than 4 feet wide at corners (walls which do not comply with conventional bracing as described in IRC R602.10.3). The construction details of the alternate bracing method and the required connections to foundations must be shown on the plans.

f. Energy. Note min. insulation R-values for building envelope assemblies (wall, crawl spaces, ceiling, and attic) to be used; Note max. U-values for building fenestration.

Residential Wood I-Joist Submittal Guidelines

- A electronic set of I-joist drawings should be submitted to the Building Codes office for review and approval prior to I-joist erection.
- The I-joist drawings should show both a layout plan, identifying the different I-joist locations, and location of all required squash blocks, web stiffeners, and required rim joist installation. Plans should identify the required spacing, design loads, support points, bearing length, job location or builder/plan #, I joist manufacturer, and other relevant information.
- Plans should be reviewed and approved (not sealed) by the design professional that sealed the house plans. Proof of this review and approval may be a letter, an approval stamp, or something similar.
- Code reference is 2018 IRC Sections 106.1 and 502.1.2, ASTM D5055.
- Minimum uniform distributed live load is 40 psf for single-family residence floors, except that single-family residence sleeping room's minimum live load is 30 psf. (Re: 2018 IRC Sections 301.5).

Residential Truss Submittal Guidelines

Truss Plans shall be submitted for review and approval. Truss plans may be submitted for review and approval to the Building Permit office after the building permit has been issued as a "deferred submittal" (Re: 2018 IBC Section 107.3.4.1) if the following information is shown on the building construction plans:

1. The locations where trusses are proposed to be used (roof or floor).
2. The minimum design loads for trusses, including dead and live loads, wind and snow loads, attic storage, mechanical systems, partition loading, and special loading conditions.
3. The location of all bearing walls, columns, beams and other truss support points.
4. A note is provided that indicates the person responsible for the structural design of the house will review the truss drawings for general conformance to the design of the building, prior to submitting the truss drawing to the Building Permit Office for approval.

Truss plans submitted for projects that do not comply with the provisions above shall be treated as amended construction documents, and charged plan review fees as applicable in each jurisdiction.

When truss plans are submitted for review and approval, they shall shall comply with the requirements below, and contain the following information:

- A electronic set of truss drawings should be submitted to the Building Codes office for review and approval prior to truss erection. Plans should reflect that the trusses have been designed and constructed in compliance with ANSI/TPI 1 2002. <u>A copy of the most recent quarterly TPI inspection report, as required by ANSI/TPI-1 must be submitted as part of the truss drawing package.</u>
- The truss drawings should show both a layout plan, identifying the different truss locations, and individual truss type drawings, which show the spacing, design loads, support points, job location or builder/plan #, truss manufacturer, and other relevant information required by R502.11 and/or R802.10..

  Truss drawings should be signed and sealed by a Kansas registered engineer. <u>Truss layout plans do not require a seal</u>. <u>Seals are not required to be original.</u>
- Truss plans should be reviewed and approved (not sealed) by the person responsible for the structural design of the house. The review is to verify that the proposed trusses are compatible with the design of the building. Proof of this review and approval may be a letter, an approval stamp, or something similar.
- Code references are 2018 IRC Sections R106.1, R301.1, R502.11 and R802.10.

SECTION R328
PHYSICAL SECURITY

R328.1 Purpose. The purpose of this Section is to establish minimum standards that incorporate physical security to make dwelling units resistant to unlawful entry.

R328.1.1 Scope. The provisions of this Section shall apply to all new structures.

R328.2 Doors. Except for vehicular access doors, all exterior swinging doors of residential buildings and attached garages, including the doors leading from the garage area into the dwelling, shall comply with Sections R 328.2.1 through R328.4.4. For purposes of this Section, doors leading from the garage area into the dwelling shall be deemed to be exterior doors.

R328.2.1 Wood Doors. Where installed, exterior wood doors shall be of solid core construction such as high-density particleboard, solid wood, or wood block core with a minimum thickness of one and three-fourths inches (1 ¾”) at any point. Doors with panel inserts shall be solid wood. The panels shall be a minimum of one inch (1”) thick. The tapered portion of the panel that inserts into the groove of the door shall be a minimum of one-quarter inch (1/4”) thick. The groove shall be a dado groove or applied molding construction. The groove shall be a minimum of one-half inch (1/2”) in depth.

R328.2.2 Steel Doors. Where installed, exterior steel doors shall be a minimum thickness of twenty-four (24) gauge.

R328.2.3 Fiberglass Door. Fiberglass doors shall have a minimum skin thickness of one-sixteenth inch (1/16”) and have reinforcement material at the location of the deadbolt.

R328.2.4 Double Doors. Where installed, the inactive leaf of an exterior double door shall be provided with flush bolts having an engagement of not less than one inch into the head and threshold of the doorframe.

R328.2.5 Sliding Doors. Where installed, exterior sliding doors shall comply with all of the following requirements:

1. Sliding door assemblies shall be installed to prevent the removal of the panels and the glazing form the exterior with the installation of shims or screws in the upper track.
2. All sliding glass doors shall be equipped with a secondary locking device consisting of a metal pin or a surface mounted bolt assembly. Metal pins shall be installed at the intersection of the inner and outer panels of the inside door and shall not penetrate the frames exterior surface. The surface mounted bold assembly shall be installed at the base of the door.

R328.3 Door Frames. The exterior door frames shall be installed prior to a rough-in inspection. Door frames shall comply with Sections R328.3.1 through R328.3.3 for the type of assembly installed.

R328.3.1 Wood Frames. Wood door frames shall comply with all of the following requirements:

1. All exterior door frames shall be set in frame openings constructed of double studding or equivalent construction, including garage doors, but excluding

overhead doors. Door frames, including those with sidelights shall be reinforced in accordance with ASTM F476-84 Grade 40.

2. In wood framing, horizontal blocking shall be placed between studs at the door lock height for three (3) stud spaces or equivalent bracing on each side of the door opening.

R328.3.2 Steel Frames. All exterior door frames shall be constructed of eighteen (18) gauge or heavier steel, and reinforced at the hinges and strikes. All steel frames shall be anchored to the wall in accordance with manufacturer specifications. Supporting wall structures shall consist of double studding or framing of equivalent strength. Frames shall be installed to eliminate tolerances inside the rough opening.

R328.3.3 Door Jambs. Doors jambs shall comply with all of the following requirements:

1. Door jambs shall be installed with solid backing in a manner so no void exists between the strike side of the jamb and the frame opening for a vertical distance of twelve inches (12”) each side of the strike. Filler material shall consist of a solid wood block.
2. Door stops on wooden jambs for in-swinging doors shall be of one-piece construction. Jambs for all doors shall be constructed or protected as to prevent violation of the strike.

R328.4 Door Hardware. Exterior door hardware shall comply with Sections R328.4.1 through R328.4.6.

R328.4.1 Hinges. Hinges for exterior swing doors shall comply with the following:

1. At least two (2) screws, three inches (3”) in length, penetrating at least one inch (1”) into wall structure shall be used. Solid wood fillers or shims shall be used to eliminate any space between the wall structure and door frame behind each hinge.
2. Hinges for out-swinging doors shall be equipped with mechanical interlock to preclude the removal of the door from the exterior.

R328.4.2 Strike Plates. Exterior door strike plates shall be a minimum of eighteen (18) gauge metal with four (4) offset screw holes. Strike plates shall be attached to wood with not less than three inch (3”) screws, which shall have a minimum of one inch (1”) penetration into the nearest stud. Note: For side lighted units, refer to Section R328.4.6.

R328.4.3 Locks. Exterior doors shall be provided with a locking device complying with one of the following:

Single Cylinder Deadbolt shall have a minimum projection of one inch (1”). The deadbolt shall penetrate at least three-fourths inch (3/4”) into the strike receiving the projected bolt. The cylinder shall have a twist resistant, tapered hardened steel cylinder guard. The cylinder shall have a minimum of five (5) pin tumblers, shall be connected to the inner portion of the lock by solid metal connecting screws at least one-fourth inch (1/4”) in diameter and two and one-fourth inches (2 ¼”) in length. Bolt assembly (bolt housing) unit shall be of single piece construction. All deadbolts shall meet ANSI Grade 2 or Grade 3 specifications.

R328.4.4 Entry Vision and Glazing. All main or front entry doors to dwelling units shall be arranged so that the occupant has a view of the area immediately outside the door without opening the door. The view may be provided by a door viewer having a field of

view of not less than one-hundred eighty (180) degrees through windows or through view ports.

R328.4.5 Side Lighted Entry Doors. Side light door units shall have framing of double stud construction or equivalent construction complying with Section R328.3.1, R328.3.2 and R328.3.3. The door frame that separates the door opening from the side light, whether on the latch side or the hinge side, shall be double stud construction or equivalent construction complying with Sections R328.3.1 and R328.3.2. Double stud construction or construction of equivalent strength shall exist between the glazing unit of the side light and wall structure of the dwelling.

R328.5 Street Numbers. Street numbers shall comply with Section R319.

R328.6 Exterior Lighting. Exterior lighting shall comply with Sections R328.6.1 through R328.6.2.

R328.6.1 Front and Street Side Exterior Lighting. All front and street side door entrances should be protected with a minimum of one light outlet having a minimum of sixty (60) watts of lighting (or energy efficient equivalent) installed so that the light source is not readily accessible.

R328.6.2 Rear Exterior Lighting. Homes with windows or doors near ground level below eight feet (8') on the rear side of the house shall be equipped with a minimum of one light outlet having one-hundred (100) watt lighting (or energy efficient equivalent) and shall be of the flood light type. Those fixtures placed below eight feet (8') shall be fixtures manufactured such that the light source is not readily accessible.

R328.7 Alternate Materials and Methods of Construction. The provisions of this Section are not intended to prevent the use of any material or method of construction not specifically prescribed by this Section, provided any such alternate has been approved by the enforcing authority, nor is it the intention of this Section to exclude any sound method of structural design or analysis not specifically provided for in this Section. The materials, methods or construction and structural design limitations provided for in this Section shall be used, unless the enforcing authority grants exception.

The enforcing authority is authorized to approve any such alternate provided they find the proposed design, materials, and methods of work to be at least equivalent to those prescribed in this Section in quality, strength, effectiveness, burglary resistance, durability, and safety.

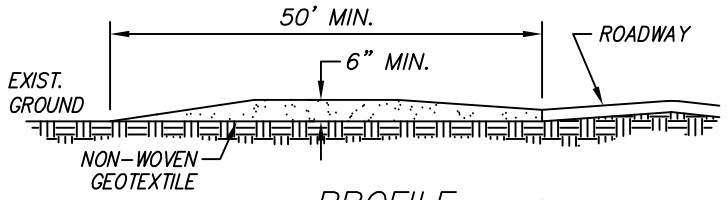

PROFILE

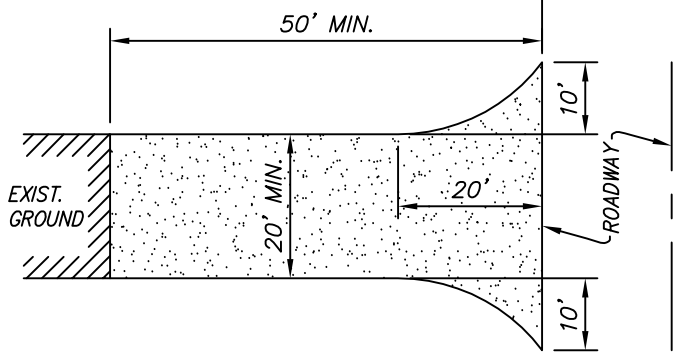

PLAN VIEW

CONSTRUCTION SPECIFICATIONS

1. STONE SIZE – USE 3" STONE, OR RECLAIMED OR RECYCLED EQUIVALENT.
2. LENGTH – AS REQUIRED, BUT NOT LESS THAN 50 FEET.
3. THICKNESS – NOT LESS THAN SIX (6) INCHES.
4. WIDTH – TWENTY (20) FOOT MINIMUM, BUT NOT LESS THAN THE FULL WIDTH AT POINTS WHERE INGRESS OR EGRESS OCCURS.
5. NON-WOVEN GEOTEXTILE – WILL BE PLACED OVER THE ENTIRE AREA PRIOR TO PLACING OF STONE.
6. WASHING – WHEELS SHALL BE CLEANED TO REMOVE SEDIMENT PRIOR TO ENTRANCE ONTO PUBLIC RIGHTS-OF-WAY. WHEN WASHING IS REQUIRED, IT SHALL BE DONE ON AN AREA STABILIZED WITH STONE AND WHICH DRAINS INTO AN APPROVED SEDIMENT TRAPPING DEVICE.

STABILIZED CONSTRUCTION ENTRANCE

TEMPORARY CONSTRUCTION ENTRANCE PAD NOTES:

A. INSTALLATION:

1. AVOID LOCATING ON STEEP SLOPES OR AT CURVES ON PUBLIC ROADS. IF POSSIBLE, LOCATE WHERE PERMANENT ROADS WILL EVENTUALLY BE CONSTRUCTED.
2. REMOVE ALL VEGETATION AND OTHER UNSUITABLE MATERIAL FROM THE FOUNDATION AREA, GRADE, AND CROWN FOR POSITIVE DRAINAGE.
3. IF SLOPE TOWARDS THE PUBLIC ROAD EXCEEDS 2%, CONSTRUCT A 6-TO 8-INCH HIGH RIDGE WITH 3H:1V SIDE SLOPES ACROSS THE FOUNDATION APPROXIMATELY 15 FEET FROM THE EDGE OF THE PUBLIC ROAD TO DIVERT RUNOFF AWAY FROM IT.
4. INSTALL PIPE UNDER THE ENTRANCE IF NEEDED TO MAINTAIN DRAINAGE DITCHES ALONG PUBLIC ROADS.
5. PLACE STONE TO DIMENSIONS AND GRADE AS SHOWN ON PLANS. LEAVE SURFACE SMOOTH AND SLOPED FOR DRAINAGE.
6. DIVERT ALL SURFACE RUNOFF AND DRAINAGE FROM THE ENTRANCE TO A SEDIMENT CONTROL DEVICE.
7. PLACE GEOTEXTILE FABRIC ON THE GRADED FOUNDATION TO IMPROVE STABILITY.

B. TROUBLESHOOTING:

1. CONSULT WITH A QUALIFIED DESIGN PROFESSIONAL IF ANY OF THE FOLLOWING OCCUR:
   A. INADEQUATE RUNOFF CONTROL TO THE EXTENT THAT SEDIMENT WASHES ONTO PUBLIC ROAD – INSTALL DIVERSIONS OR OTHER RUNOFF CONTROL MEASURES.
   B. SMALL STONE, THIN PAD, OR ABSENCE OF GEOTEXTILE FABRIC RESULTS IN RUTS AND MUDDY CONDITIONS AS STONE IS PRESSED INTO SOIL – INCREASE STONE SIZE OR PAD THICKNESS OR ADD GEOTEXTILE FABRIC.
   C. PAD TOO SHORT FOR HEAVY CONSTRUCTION TRAFFIC – EXTEND PAD BEYOND THE MINIMUM 50-FOOT LENGTH AS NECESSARY.

C. INSPECTION AND MAINTENANCE:

1. INSPECT STONE PAD AND SEDIMENT DISPOSAL AREA WEEKLY AND AFTER 1/2-INCH OR GREATER STORM EVENTS.
2. RESHAPE PAD AS NEEDED FOR PROPER DRAINAGE AND RUNOFF CONTROL.
3. TOPDRESS WITH CLEAN 2-AND 3-INCH STONE AS NEEDED.
4. IMMEDIATELY REMOVE MUD OR SEDIMENT TRACKED OR WASHED ONTO PUBLIC ROAD. REPAIR ANY BROKEN ROAD PAVEMENT IMMEDIATELY.
5. REMOVE ALL TEMPORARY ROAD MATERIALS FROM AREAS WHERE PERMANENT VEGETATION WILL BE ESTABLISHED.
6. PERIODIC INSPECTION AS NEEDED MAINTENANCE SHALL BE PROVIDED AFTER EACH RAIN.

BIODEGRADABLE LOG OR FILTER SOCK:

A. INSTALLATION:

1. PLACE BIODEGRADABLE LOGS OR FILTER SOCK TIGHTLY TOGETHER MINIMUM OVERLAP OF 18".
2. WOOD STAKES SHALL BE 2" X 2" (NOM.).
3. REFER TO PLAN SHEETS TO ESTIMATE LENGTH OF BIODEGRADABLE LOG AND FILTER SOCK REQUIRED.
4. EACH LOG OR SOCK (EXCEPT COMPOST FILTER SOCKS) SHOULD BE KEYED INTO THE GROUND AT A MINIMUM OF 25% OF ITS HEIGHT. COMPOST FILTER SOCKS SHOULD BE PLACED ON SMOOTH PREPARED GROUND WITH NO GAPS BETWEEN THE SOCK AND SOIL.
5. LENGTH OF STAKES SHOULD BE 2 TIMES THE HEIGHT OF THE LOG AT A MINIMUM WITH MINIMUM GROUND EMBEDMENT EQUAL TO THE HEIGHT OF THE LOG/SOCK.

B. CONSTRUCTION SPECIFICATIONS:

1. DETERMINE THE EXACT LOCATION OF UNDERGROUND UTILITIES, BEFORE STAKING SO UTILITIES ARE NOT DISTURBED.
2. SLOPE INTERRUPTIONS SHALL BE PLACED ALONG CONTOUR LINES, WITH A SHORT SECTION TURNED UPGRADE AT EACH END OF THE BARRIER.
3. INSPECT REGULARLY, AND AFTER A RUNOFF PRODUCING RAINFALL, TO ENSURE THEY REMAIN THOROUGHLY ENTRENCHED AND IN CONTACT WITH THE SOIL. WHEN SEDIMENT FILLS THE AREA BEHIND THE LOG OR SOCK TO 1/2 THE HEIGHT, THE CONTRACTOR SHALL REMOVE THE SEDIMENT.

C. INSPECTION AND MAINTENANCE:

1. INSPECT BARRIERS AFTER EACH STORM EVENT AND REMOVE ANY SEDIMENT DEPOSITS PROMPTLY, TAKING CARE NOT TO UNDERMINE THE ENTRENCHED LOG OR SOCK.
2. INSPECT PERIODICALLY FOR DETERIORATION OR DAMAGE FROM CONSTRUCTION ACTIVITIES. REPLACE DAMAGED BARRIERS IMMEDIATELY.
3. AFTER THE CONTRIBUTING DRAINAGE AREA HAS BEEN STABILIZED, REMOVE ALL BARRIERS AND SEDIMENT, BRING THE DISTURBED AREA TO GRADE, AND STABILIZE.

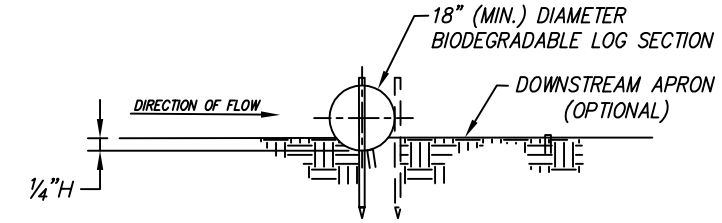

SECTION A–A

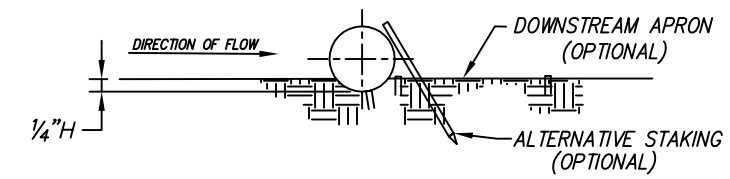

ALTERNATE DETAIL

OPTIONAL

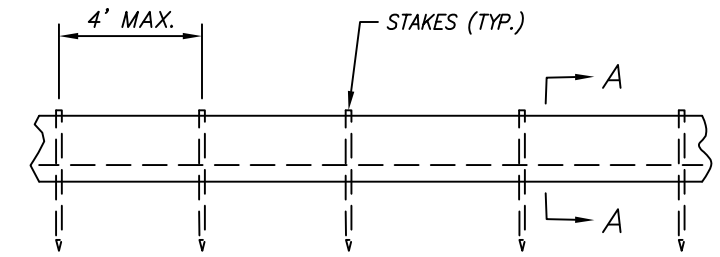

TYPICAL ELEVATION

BIODEGRADABLE LOG OR FILTER SOCK SLOPE INTERRUPTIONS

		PRODUCT		
		9" SEDIMENT LOG OR 8" FILTER SOCK (FT)	12" SEDIMENT LOG OR 12" FILTER SOCK (FT)	20" SEDIMENT LOG OR 18" FILTER SOCK (FT)
SLOPE GRADIENT	<=4H:1V	40	60	80
	3H:1V	30	45	60

BIODEGRADABLE LOG SLOPE INTERRUPTIONS OR FILTER SOCK

SEDIMENTATION FENCE NOTES:

A. INSTALLATION:

1. THE HEIGHT OF SEDIMENT FENCE SHALL BE A MINIMUM OF 30 INCHES ABOVE THE ORIGINAL GROUND SURFACE AND SHALL NOT EXCEED 36 INCHES ABOVE THE GROUND SURFACE.
2. THE FABRIC SHALL BE PURCHASED IN A CONTINUOUS ROLL CUT TO THE LENGTH OF THE BARRIER TO AVOID THE USE OF JOINTS. WHEN JOINTS ARE UNAVOIDABLE, THE FILTER FABRIC SHALL BE SECURELY SPLICED TOGETHER ONLY AT SUPPORT POSTS, WITH A MAXIMUM 6-INCH OVERLAP.
3. DIG A TRENCH AT LEAST 6 INCHES DEEP AND 24 INCHES WIDE ALONG THE FENCE ALIGNMENT.
4. DRIVE POSTS AT LEAST 12 INCHES AND NO MORE THAN 18 INCHES INTO THE GROUND ON THE DOWNSLOPE SIDE OF THE TRENCH. SPACE POSTS A MAXIMUM OF 5 FEET APART.
5. EXTRA-STRENGTH SEDIMENT FENCE FABRIC SHALL BE USED. POSTS FOR THIS TYPE OF FABRIC SHALL BE PLACED A MAXIMUM OF 10' APART. THE SEDIMENT FABRIC SHALL BE FASTENED SECURELY TO THE UPSLOPE SIDE OF THE POSTS USING A MINIMUM OF ONE INCH LONG, HEAVY-DUTY WIRE STAPLES OR TIE-WIRES, AND 24 INCHES OF THE FABRIC SHALL BE EXTENDED INTO THE TRENCH. THE FABRIC SHALL NOT BE STAPLED TO EXISTING TREES.
6. PLACE THE BOTTOM 2 FEET OF FABRIC IN THE MINIMUM-OF-6-INCH DEEP TRENCH, LAPPING TOWARD THE UPSLOPE SIDE. BACKFILL WITH COMPACTED EARTH OR WASHED STONE TO A HEIGHT OF 6" ABOVE GROUND LEVEL.
7. IF A SEDIMENT FENCE IS TO BE CONSTRUCTED ACROSS A DITCH LINE OR SWALE, IT MUST BE OF SUFFICIENT LENGTH TO ELIMINATE ENDFLOW, AND THE PLAN CONFIGURATION SHALL RESEMBLE AN ARC OR HORSESHOE, PLACED ON A CONTOUR, WITH THE ENDS ORIENTED UPSLOPE. EXTRA-STRENGTH SEDIMENT FABRIC SHALL BE USED WITH A MAXIMUM 3-FOOT SPACING OF POSTS.
8. TO REDUCE MAINTENANCE, EXCAVATE A SHALLOW SEDIMENT STORAGE AREA IN THE UPSLOPE SIDE OF THE FENCE. PROVIDE GOOD ACCESS IN AREAS OF HEAVY SEDIMENTATION FOR CLEAN OUT AND MAINTENANCE.
9. SEDIMENT FENCES SHALL BE REMOVED WHEN THEY HAVE SERVED THEIR USEFUL PURPOSE, BUT NOT BEFORE THE UPSLOPE AREA HAS BEEN PERMANENTLY STABILIZED.

B. CONSTRUCTION SPECIFICATIONS:

1. DETERMINE THE EXACT LOCATION OF UNDERGROUND UTILITIES, BEFORE FENCE INSTALLATION SO UTILITIES ARE NOT DISTURBED.
2. GRADE ALIGNMENT OF FENCE AS NEEDED TO PROVIDE A BROAD, NEARLY LEVEL AREA UPSTREAM OF FENCE TO ALLOW SEDIMENT COLLECTION AREA.

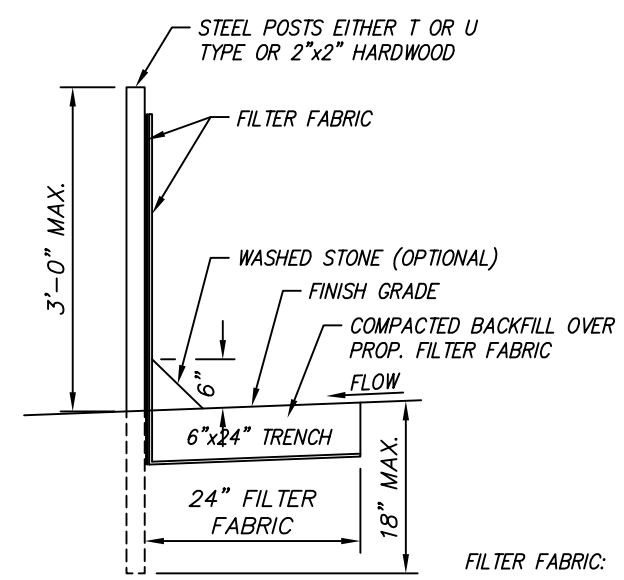

CROSS SECTION

FILTER FABRIC: FILTER X MIRAFI 100X, STABILINKA T140N OR APPROVED EQUAL

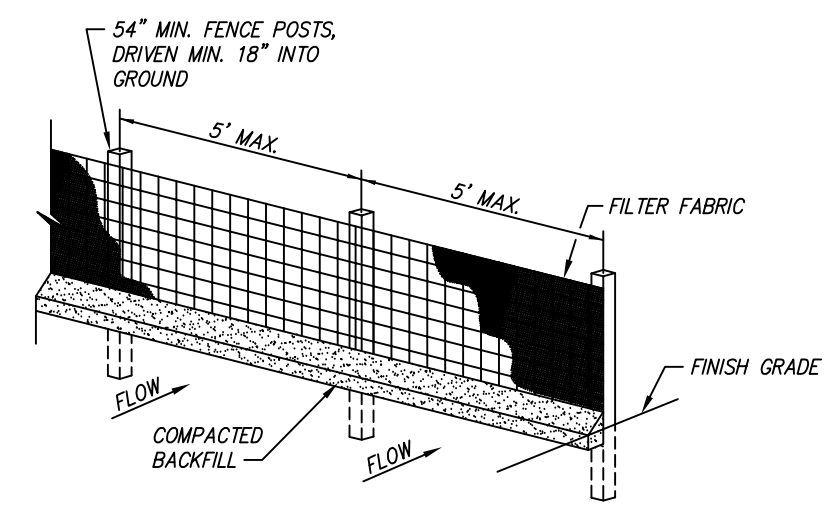

ELEVATION

SEDIMENT FENCE

Date	Revision	By	Appr.
6-6-23	UPDATED CITY BRAND	BPS	LKS
11-04-21	PUBLIC INPUT COMMENTS	KTF	LKS
9-10-20	SHAWNEE DESIGN & CONSTRUCTION MANUAL REVISIONS	JAR	LKS
3-1-14	SHAWNEE DESIGN & CONSTRUCTION MANUAL REVISIONS	MRS	PJL
8-21-12	REVISED TO MATCH CONSTRUCTION SPECIFICATION REVISIONS	MRS	PJL

EROSION AND SEDIMENT CONTROL

PUBLIC WORKS

Shawnee KANSAS

DATE:	08-27-2007	3100
DRAWN BY:	MRS	
CHECKED BY:	PJL	SHEET 1 OF 1

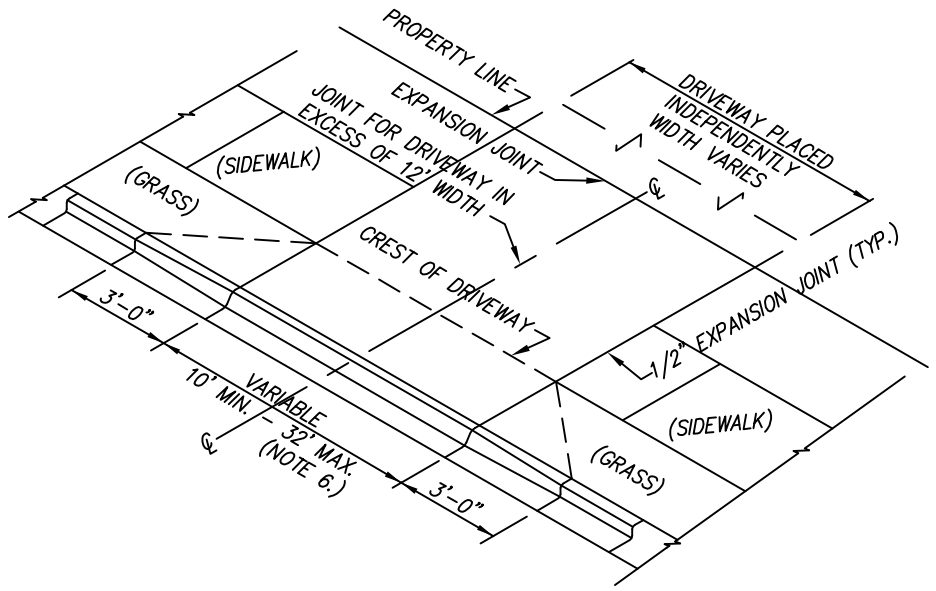

TYPE "A" CURB ISOMETRIC

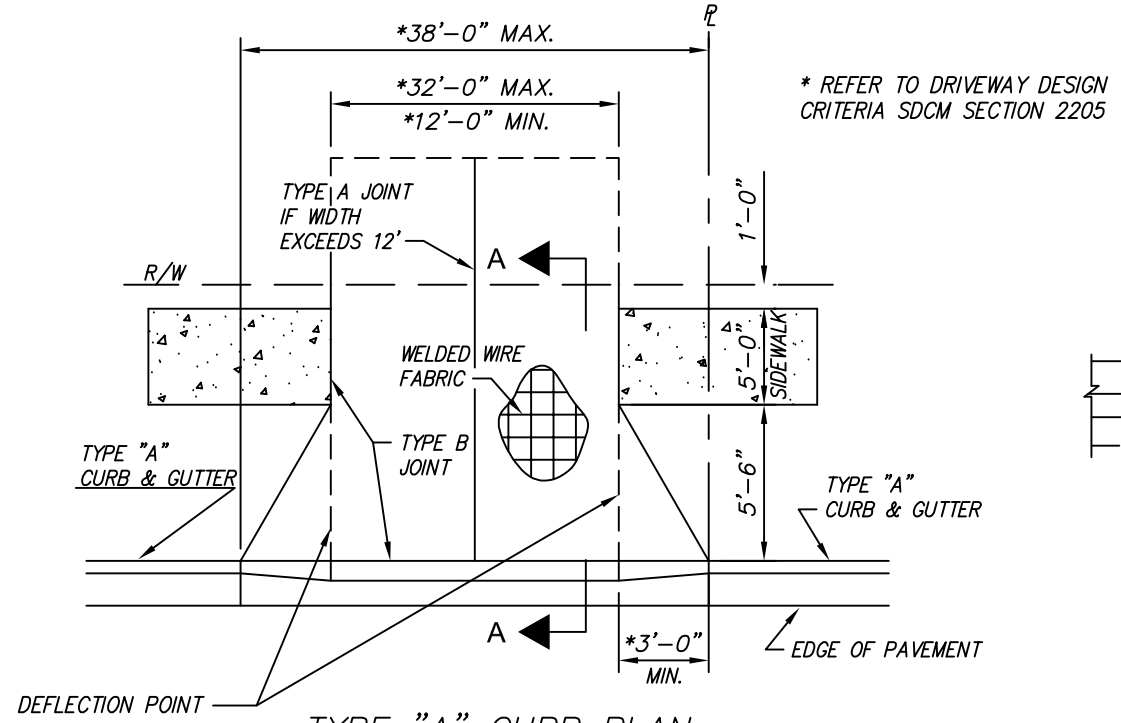

TYPE "A" CURB PLAN

* REFER TO DRIVEWAY DESIGN CRITERIA SDCM SECTION 2205

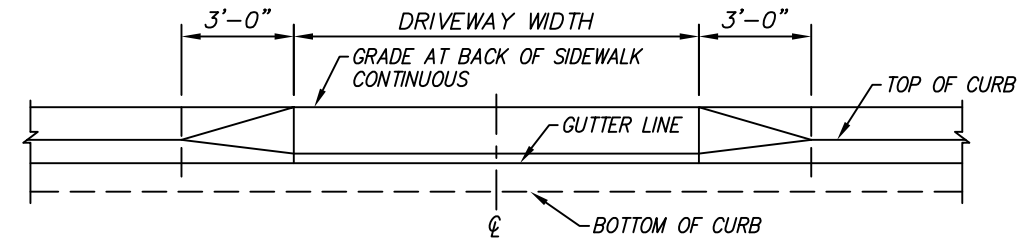

TYPE "A" CURB ELEVATION

NOTES:

1. SIDEWALK IS LOCATED ONE FOOT FROM RIGHT OF WAY LINE, THEREFORE POSITION OF SIDEWALK IN RELATION TO 6'-6"x 3'-0" TRANSITION MAY VARY.
2. DRIVE APPROACH SHALL NOT EXTEND PAST SIDE PROPERTY LINE EXTENSION.
3. ALL CONCRETE SHALL BE "KCMMB4K" OR APPROVED EQUAL. KCMMB IS NOT REQUIRED IN PRIVATE APPLICATIONS.
4. WELDED WIRE FABRIC SHALL BE 6x6-W2.9xW2.9. WELDED WIRE IS NOT REQUIRED IN PRIVATE APPLICATIONS.
5. WHEN SIDEWALK IS PRESENT, NO BRICK PAVERS, CONCRETE STAMPS OR MATERIALS OTHER THAN CONCRETE SHALL BE USED FOR DRIVE APPROACH CONSTRUCTION.
6. MAXIMUM THROAT WIDTHS FOR SINGLE-FAMILY 1 TO 2-CAR GARAGE AND TWO-FAMILY (SEPARATED GARAGES) SHALL BE 24 FEET. SINGLE-FAMILY 3-CAR GARAGE AND TWO-FAMILY (SIDE-BY-SIDE GARAGES) SHALL BE 32 FEET. REFER TO DRIVEWAY DESIGN CRITERIA SDCM SECTION 2205

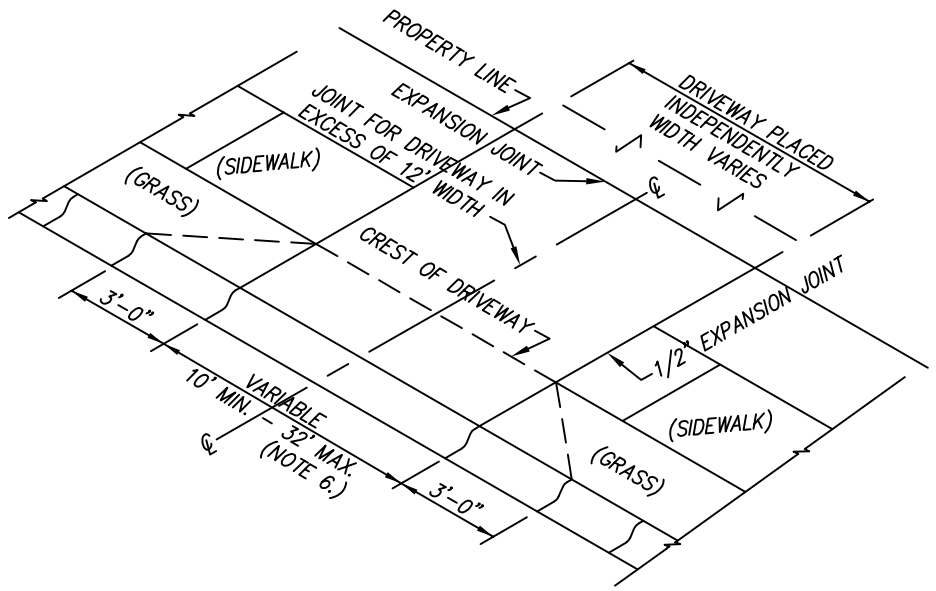

TYPE "B" CURB ISOMETRIC

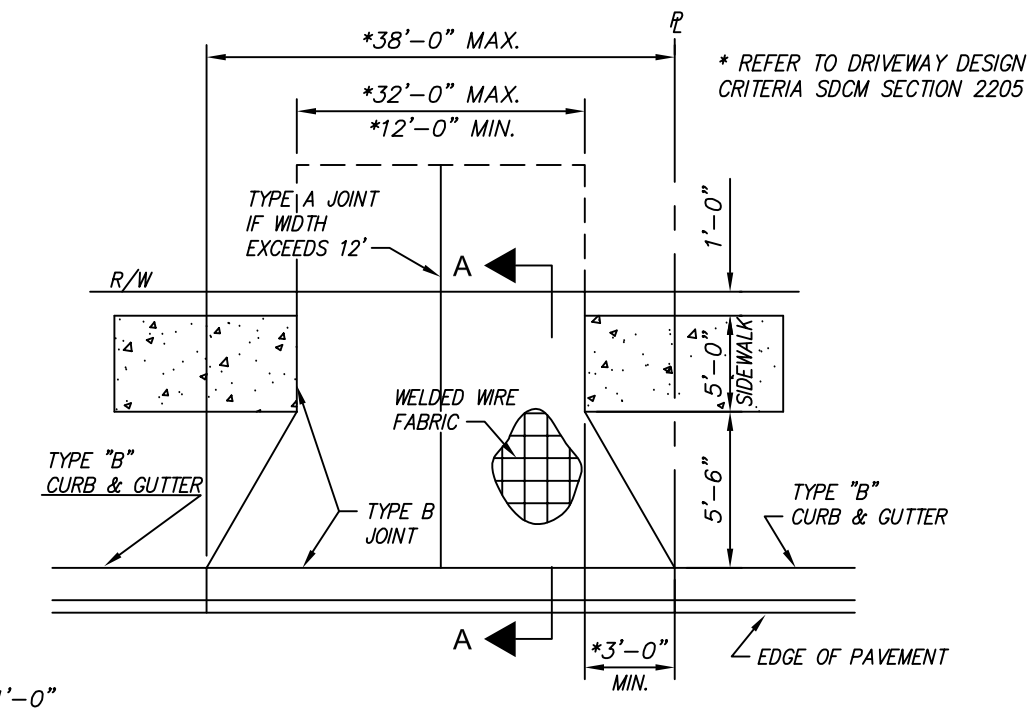

TYPE "B" CURB PLAN

* REFER TO DRIVEWAY DESIGN CRITERIA SDCM SECTION 2205

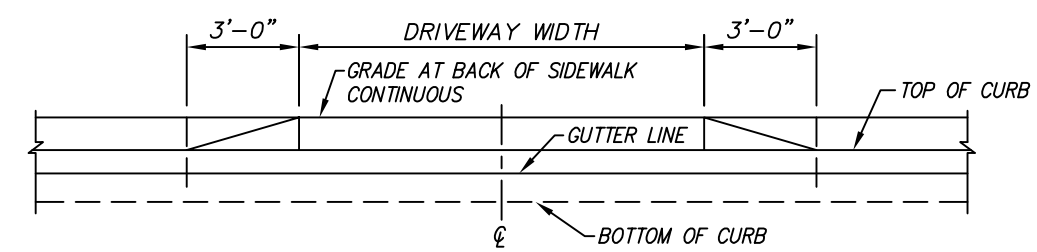

TYPE "B" CURB ELEVATION

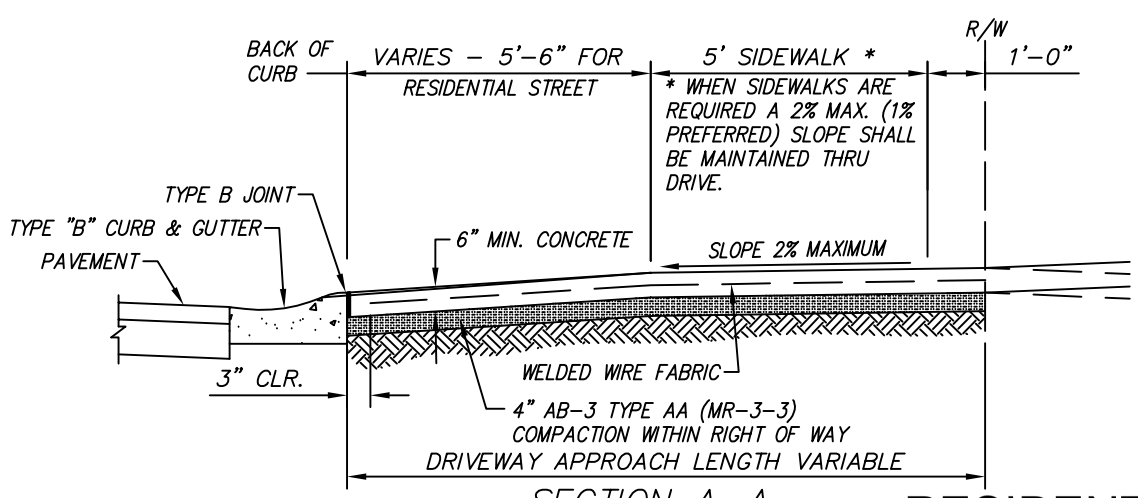

SECTION A-A

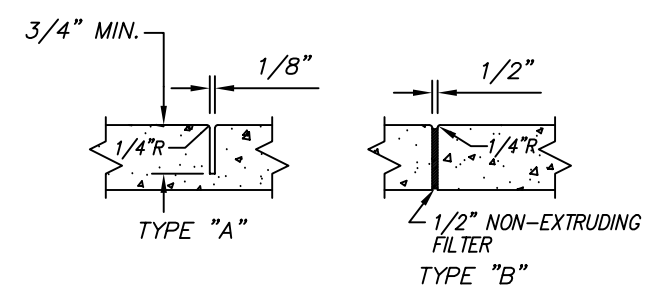

JOINT DETAILS

RESIDENTIAL DRIVE APPROACHES (CURBED STREET)

Date	Revision	By	Appr.
6-5-23	UPDATED CITY BRAND	BPS	LKS
11-04-21	PUBLIC INPUT COMMENTS	KTF	LKS
1-8-21	SHAWNEE DESIGN & CONSTRUCTION MANUAL REVISIONS	JTG	LKS
3-1-14	SHAWNEE DESIGN & CONSTRUCTION MANUAL REVISIONS	MRS	PJL
8-21-12	REVISED TO MATCH CONSTRUCTION SPECIFICATION REVISIONS	MRS	PJL

RESIDENTIAL DRIVE APPROACHES
TYPES "A" & "B"

PUBLIC WORKS

Shawnee KANSAS

DATE: 08-27-2007
DRAWN BY: MRS
CHECKED BY: PJL

3226-1

SHEET 1 OF 1

DRIVEWAY DESIGN CRITERIA

TYPE OF RESIDENCE AND GARAGE CAPACITY	MAXIMUM THROAT WIDTH [1] EDGE-TO-EDGE (FEET)
SINGLE-FAMILY (ONE-CAR GARAGE)	24
SINGLE-FAMILY (TWO-CAR GARAGE)	24
SINGLE-FAMILY (THREE-CAR GARAGE)	32
TWO-FAMILY (TWO, ONE-CAR GARAGES)	24
TWO-FAMILY (TWO, TWO-CAR GARAGES)	32 [2]

[1] NO RESIDENTIAL DRIVEWAY SHALL HAVE A THROAT WIDTH OF LESS THAN TWELVE FEET (12') MEASURED FROM PAVEMENT-EDGE TO PAVEMENT-EDGE.

[2] COMBINED DRIVEWAYS SERVING TWO SIDE-BY-SIDE, TWO GARAGES ARE DISCOURAGED BECAUSE OF THEIR IMPACT ON THE ON-STREET PARKING. SUCH DRIVEWAYS SHALL ONLY BE ALLOWED FOR THOSE LOTS SHOWN ON A DRIVEWAY LOCATION PLAN FOR A DEVELOPMENT SUBMITTED TO AND APPROVED BY THE PLANNING COMMISSION UPON THE RECOMMENDATION OF THE ENGINEER.

ROADWAY CLASSIFICATION	RESIDENTIAL RETURN FLARE (FEET)
MAJOR ARTIAL	5
MINOR ARTERIAL	5
MAJOR COLLECTOR	5
MINOR SERVICE COLLECTOR	5
MINOR RESIDENTIAL COLLECTOR	3
LOCAL SERVICE STREET	3
LOCAL RESIDENTIAL STREET	3

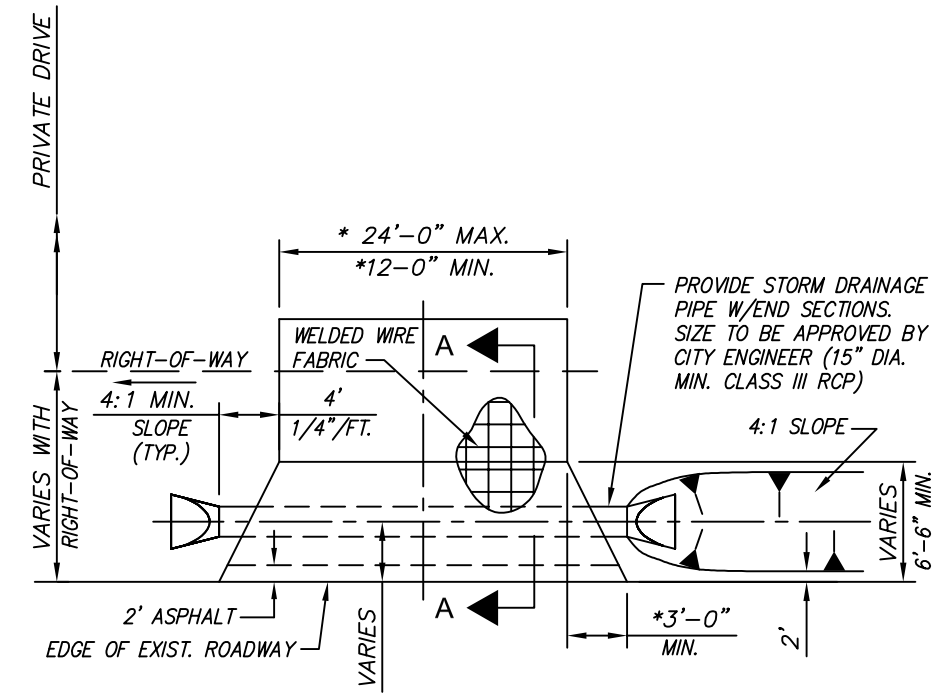

PLAN

* SEE DESIGN CRITERIA

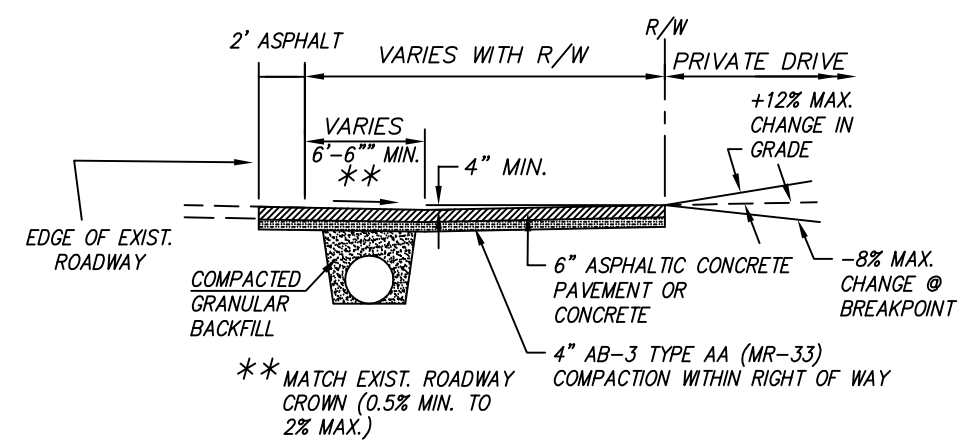

SECTION A-A

NOTES:

1. ROADSIDE DITCH SHALL BE GRADED ALONG ENTIRE STREET FRONTAGE IN ORDER TO PROVIDE POSITIVE DRAINAGE FOR ALL DRIVE APPROACHES ASSOCIATED WITH NEW HOME CONSTRUCTION.
2. DRIVEWAY APPROACH SHALL NOT EXTEND PAST SIDE PROPERTY LINE EXTENSION.
3. ALL CONCRETE SHALL BE "KCMMB4K" OR APPROVED EQUAL. KCMMB IS NOT REQUIRED IN PRIVATE APPLICATIONS.
4. WELDED WIRE FABRIC SHALL BE 6x6-W2.9xW2.9. WELDED WIRE IS NOT REQUIRED IN PRIVATE APPLICATIONS.

RESIDENTIAL DRIVE APPROACH - TYPE "R"
(NON-CURBED STREET)

Date	Revision	By	Appr.
6-5-23	UPDATED CITY BRAND	BPS	LKS
1-8-21	SHAWNEE DESIGN & CONSTRUCTION MANUAL REVISIONS	JTG	LKS
3-1-14	SHAWNEE DESIGN & CONSTRUCTION MANUAL REVISIONS	MRS	PJL
8-21-12	REVISED TO MATCH CONSTRUCTION SPECIFICATION REVISIONS	MRS	PJL

RESIDENTIAL DRIVE APPROACH
TYPE "R"
(NON-CURBED STREET)

PUBLIC WORKS

Shawnee KANSAS

DATE:	08-27-2007	3226-2
DRAWN BY:	MRS	
CHECKED BY:	PJL	SHEET 1 OF 1

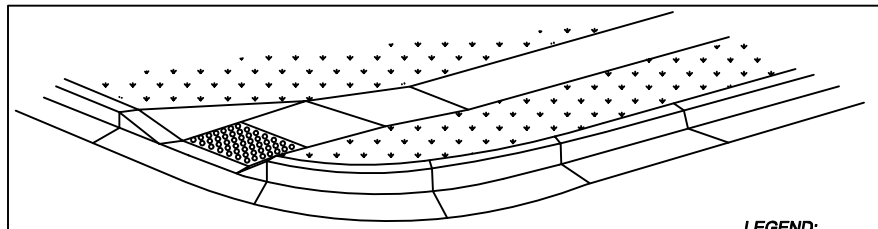

3-D VIEW TYPE A
SIDEWALK RAMP
NOT TO SCALE

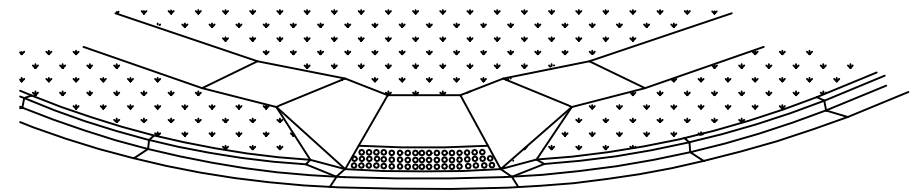

3-D VIEW TYPE B
SIDEWALK RAMP
NOT TO SCALE

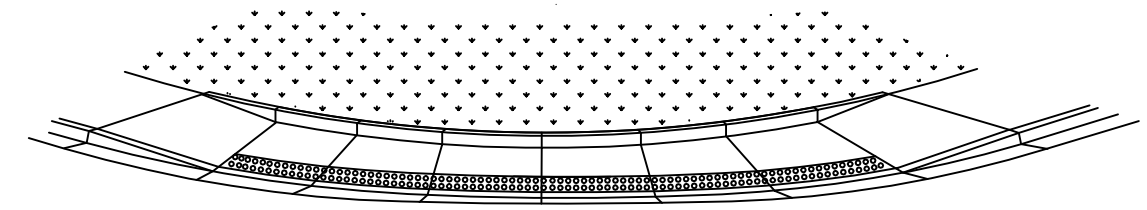

3-D VIEW TYPE C
SIDEWALK RAMP
NOT TO SCALE

LEGEND:

- R — RAMP
- L — LANDING
- 2'-0" DETECTABLE WARNING PANELS
- T — TRANSITION

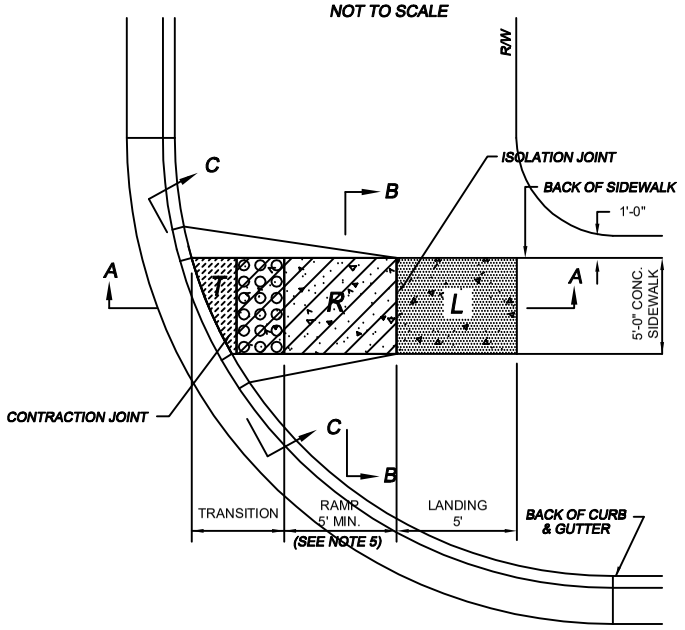

TYPE A SIDEWALK RAMP
SCALE: ¼"=1'-0"

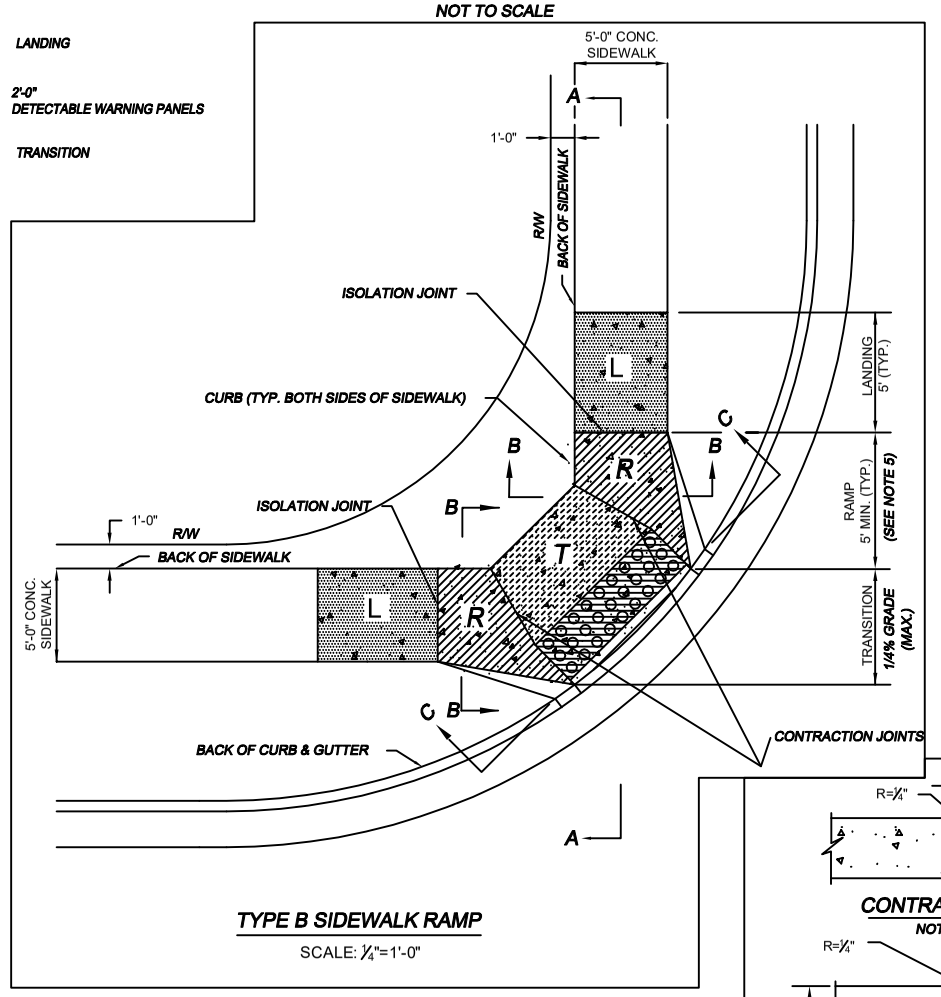

TYPE B SIDEWALK RAMP
SCALE: ¼"=1'-0"

SIDEWALK RAMP NOTES:

1. SIDEWALK RAMP LOCATION DETERMINED FROM THE INTERSECTION OF THE EXTENSION OF BACK OF SIDEWALK AND BACK OF CURB AND GUTTER.
2. KEY ALL CONSTRUCTION JOINTS OR USE 18" #4 EPOXY COATED TIE BARS @ 12" O.C.
3. LONGITUDINAL JOINT SPACING TO MATCH WIDTH OF SIDEWALK.
4. ISOLATION JOINTS SHALL BE PLACED WHERE SIDEWALKS ABUTS DRIVEWAYS AND SIMILAR STRUCTURES, AND 250' CENTERS MAX.
5. SIDEWALK RAMP SHALL BE LENGTHENED TO PROVIDE ADA COMPLIANCE BUT NEED NOT EXCEED 15'.
6. LANDING FOR TYPE C CURB RAMP ALONG THE ENTIRE CURB RETURN IS PREFERRED BUT MAY BE SHORTENED TO MINIMUM ADA COMPLIANT DIMENSION.
7. DETECTABLE WARNING PANELS SHALL BE: CAST-IN-TACT PANELS - SALEM RED, TUFTILE PANELS (GALVANIZED OR CAST IRON) - BRICK RED, ADA SOLUTIONS (CAST IRON) - "IRON DOME" - BRICK RED, OR APPROVED EQUAL.

ADDITIONAL SIDEWALK NOTES:

* 5' MAY NEED ADDITIONAL 4' LONG PANEL TO TRANSITION WIDTH IF EXISTING SIDEWALKS ARE 4'

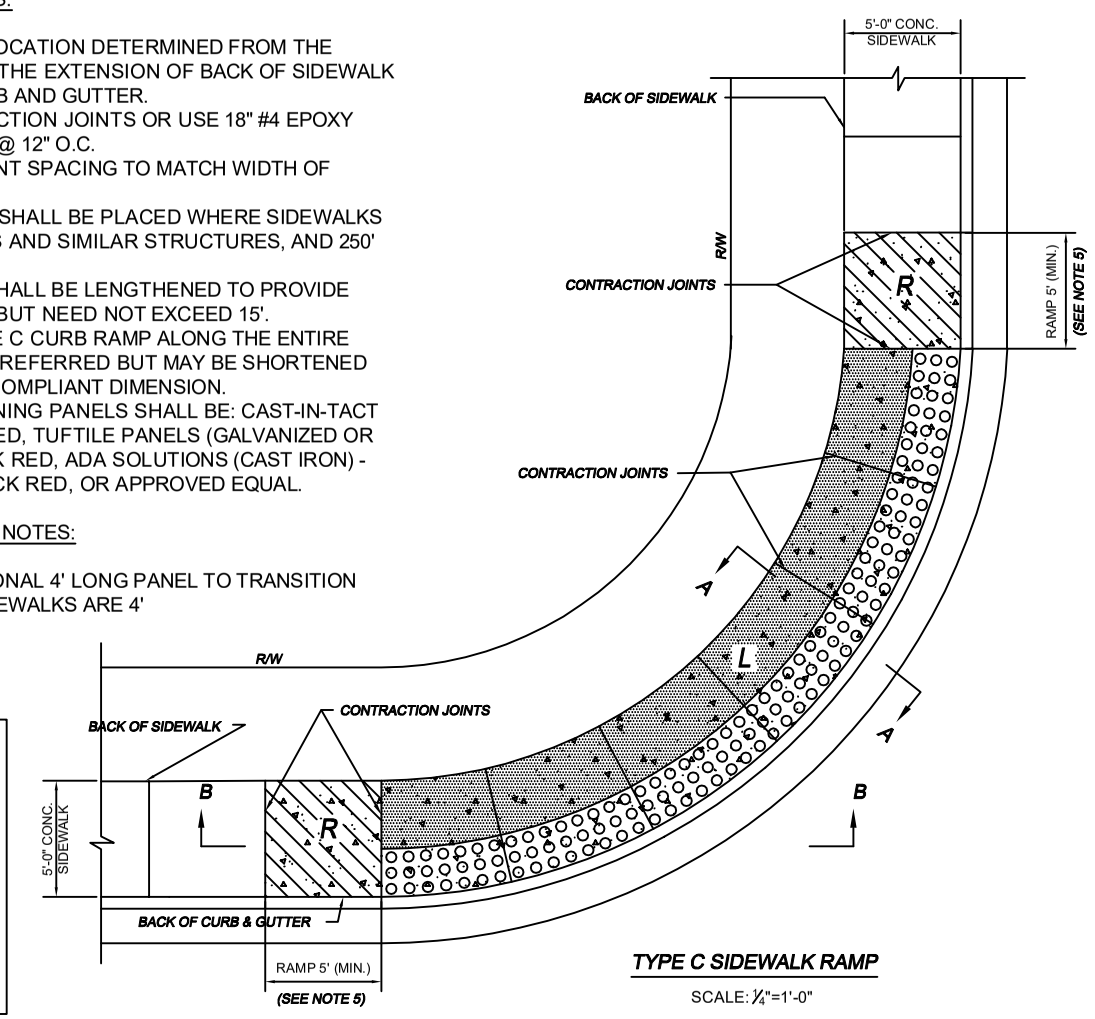

TYPE C SIDEWALK RAMP
SCALE: ¼"=1'-0"

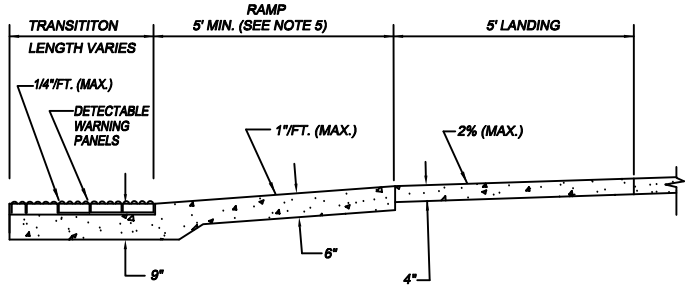

SECTION A-A
TYPE A & B SIDEWALK RAMP
SCALE: ½"=1'-0"

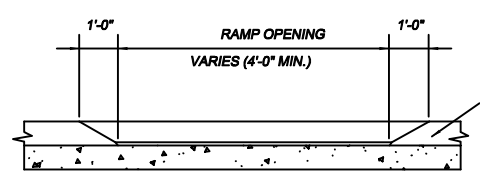

SECTION C-C
TYPE A & B SIDEWALK RAMP
SCALE: ½"=1'-0"

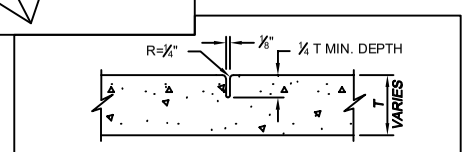

CONTRACTION JOINT
NOT TO SCALE

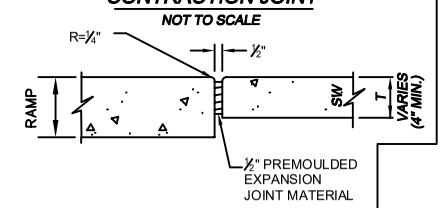

ISOLATION JOINT
NOT TO SCALE

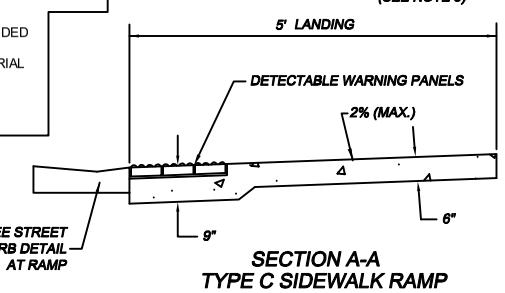

SECTION A-A
TYPE C SIDEWALK RAMP
SCALE: ½"=1'-0"

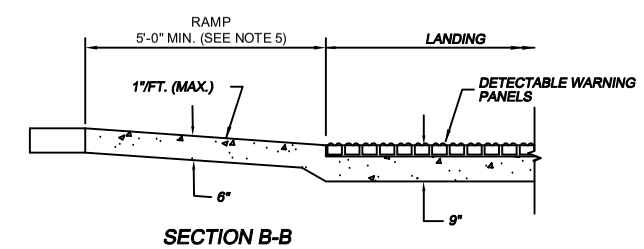

SECTION B-B
TYPE C SIDEWALK RAMP
SCALE: ½"=1'-0"

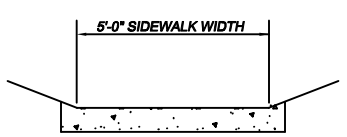

SECTION B-B
TYPE A SIDEWALK RAMP
SCALE: ½"=1'-0"

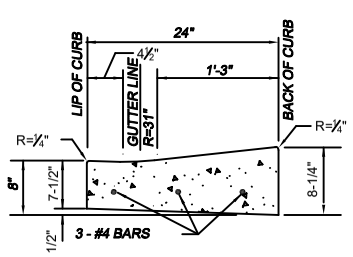

USE WITH TYPE A CURB

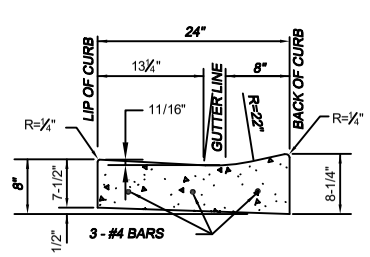

USE WITH TYPE B CURB

STREET CURB DETAIL AT RAMP
NOT TO SCALE

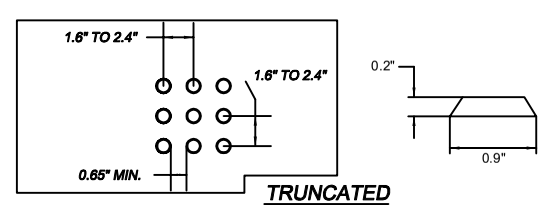

TRUNCATED
DOME DIMENSONS

Date	Revision	By	Appr.
6-5-23	UPDATED CITY BRAND	BPS	LKS
1-12-21	SHAWNEE DESIGN & CONSTRUCTION MANUAL REVISIONS	JTG	LKS
3-1-14	SHAWNEE DESIGN & CONSTRUCTION MANUAL REVISIONS	MRS	PJL
8-21-12	REVISED TO MATCH CONSTRUCTION SPECIFICATION REVISIONS	MRS	PJL

SIDEWALK RAMP DETAILS

PUBLIC WORKS

Shawnee KANSAS

DATE:	08-27-2007	3225-3
DRAWN BY:	MRS	
CHECKED BY:	PJL	SHEET 1 OF 1

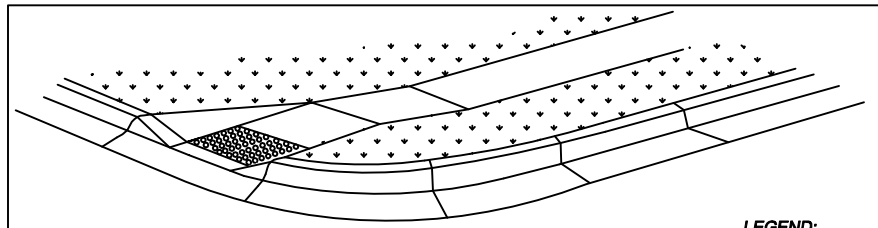

3-D VIEW TYPE A SIDEWALK RAMP

NOT TO SCALE

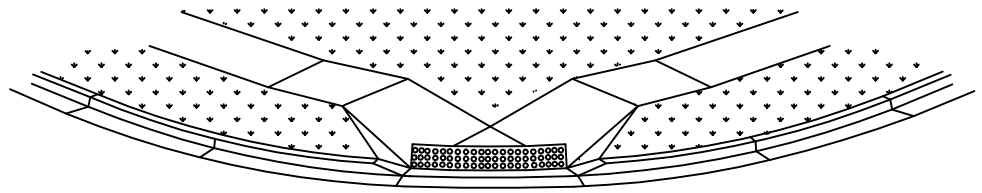

3-D VIEW TYPE B SIDEWALK RAMP

NOT TO SCALE

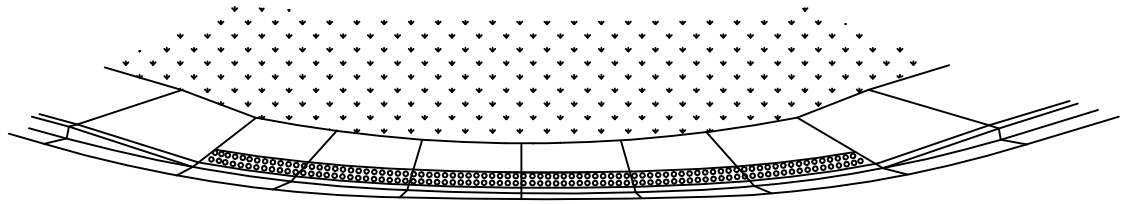

3-D VIEW TYPE C SIDEWALK RAMP

NOT TO SCALE

LEGEND:

- R — Ramp
- L — Landing
- 2'-0" Detectable Warning Panels
- T — Transition

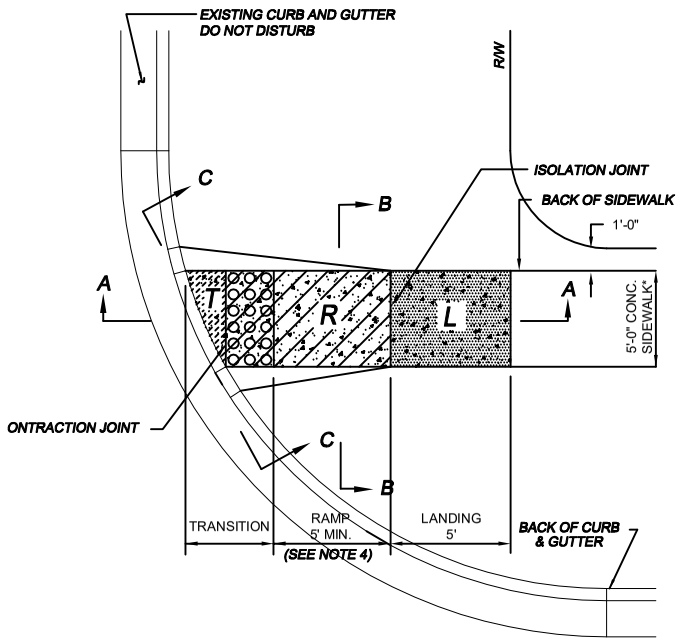

TYPE A SIDEWALK RAMP

SCALE: ¼"=1'-0"

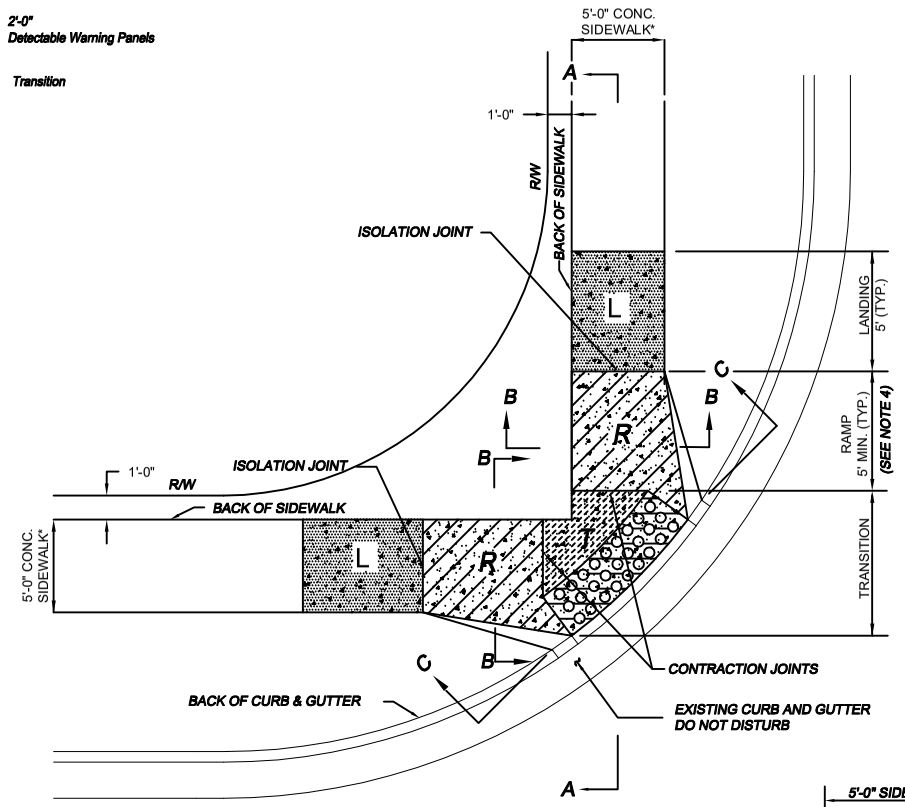

TYPE B SIDEWALK RAMP

SCALE: ¼"=1'-0"

SIDEWALK RAMP NOTES:

1. SIDEWALK RAMP LOCATION DETERMINED FROM THE INTERSECTION OF THE EXTENSION OF BACK OF SIDEWALK AND BACK OF CURB AND GUTTER.
2. LONGITUDINAL JOINT SPACING TO MATCH WIDTH OF SIDEWALK.
3. ISOLATION JOINTS SHALL BE PLACED WHERE SIDEWALK ABUTS DRIVEWAYS AND SIMILAR STRUCTURES, AND 250' CENTERS MAX.
4. SIDEWALK RAMP SHALL BE LENGTHENED TO PROVIDE ADA COMPLIANCE SLOPE BUT NEED NOT EXCEED 15'.
5. LANDING FOR TYPE C RAMP ALONG THE ENTIRE CURB RETURN IS PREFERRED BUT MAY BE SHORTENED TO MINIMUM ADA COMPLIANT DIMENSION.
6. ALL CONCRETE BENEATH DETECTABLE WARNING PANELS SHALL BE PLACED ON UNDISTURBED EARTH. OVER-EXCAVATED AREAS SHALL BE BACKFILLED WITH CONCRETE TO MINIMIZE SETTLEMENT.
7. DETECTABLE WARNING PANELS SHALL BE: CAST-IN-TACT PANELS - SALEM RED, TUFTILE PANELS (GALVANIZED OR CAST IRON) - BRICK RED, ADA SOLUTIONS (CAST IRON) - "IRON DOME" - BRICK RED, OR APPROVED EQUAL.

ADDITIONAL SIDEWALK NOTES:

* 5' MAY NEED ADDITIONAL 4' LONG PANEL TO TRANSITION WIDTH IF EXISTING SIDEWALK IS 4'

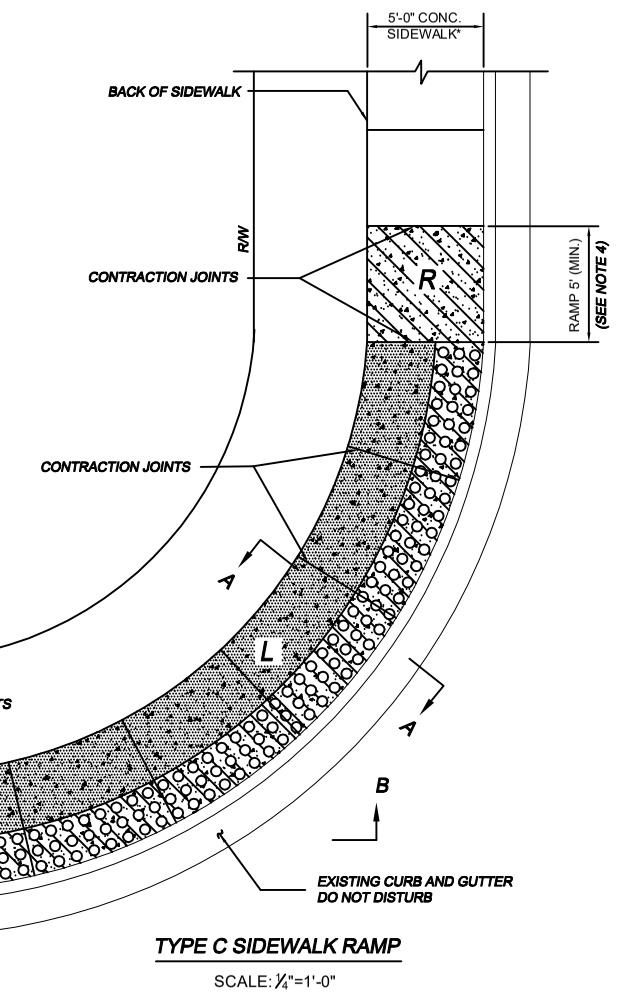

TYPE C SIDEWALK RAMP

SCALE: ¼"=1'-0"

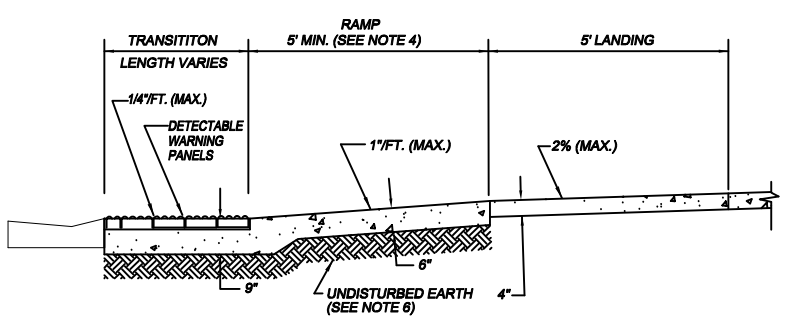

SECTION A-A
TYPE A & B SIDEWALK RAMP

SCALE: ½"=1'-0"

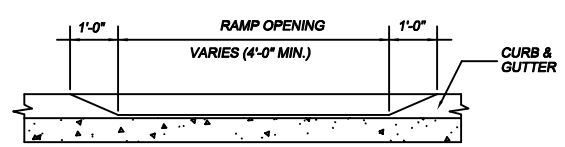

SECTION C-C
TYPE A & B SIDEWALK RAMP

SCALE: ½"=1'-0"

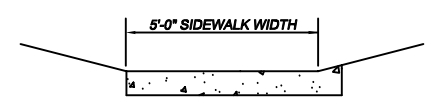

SECTION B-B
TYPE B SIDEWALK RAMP

SCALE: ½"=1'-0"

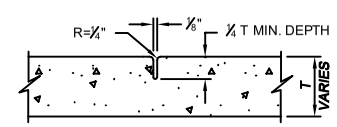

CONTRACTION JOINT

NOT TO SCALE

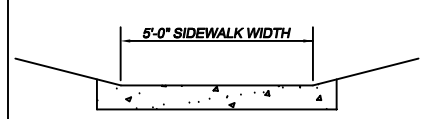

SECTION B-B
TYPE A SIDEWALK RAMP

SCALE: ½"=1'-0"

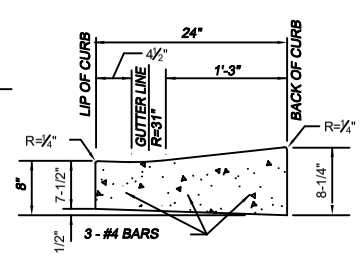

USE WITH TYPE A CURB

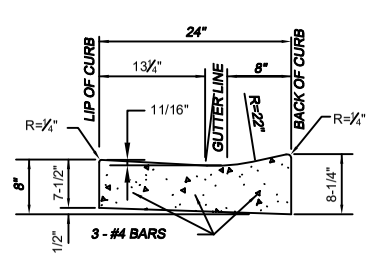

USE WITH TYPE B CURB

STREET CURB DETAIL AT RAMP

NOT TO SCALE

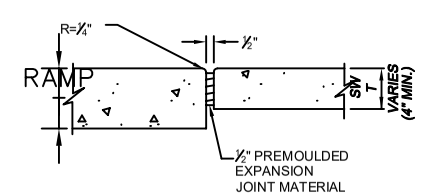

ISOLATION JOINT

NOT TO SCALE

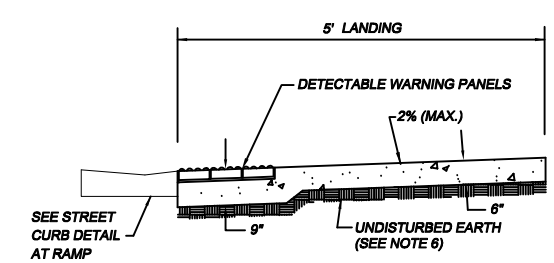

SECTION A-A
TYPE C SIDEWALK RAMP

SCALE: ½"=1'-0"

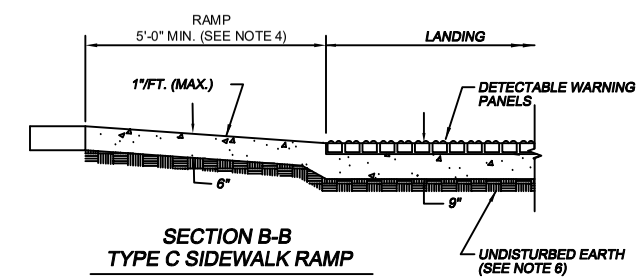

SECTION B-B
TYPE C SIDEWALK RAMP

SCALE: ½"=1'-0"

Date	Revision	By	Appr.
6-5-23	UPDATED CITY BRAND	BPS	LKS
1-12-21	SHAWNEE DESIGN & CONSTRUCTION MANUAL REVISIONS	JTG	LKS
3-1-14	SHAWNEE DESIGN & CONSTRUCTION MANUAL REVISIONS	MRS	PJL
8-21-12	REVISED TO MATCH CONSTRUCTION SPECIFICATION REVISIONS	MRS	PJL

SIDEWALK RAMP DETAILS FOR RETROFIT CONSTRUCTION

PUBLIC WORKS

Shawnee KANSAS

DATE:	08-27-2007	3225-4
DRAWN BY:	MRS	
CHECKED BY:	PJL	SHEET 1 OF 1

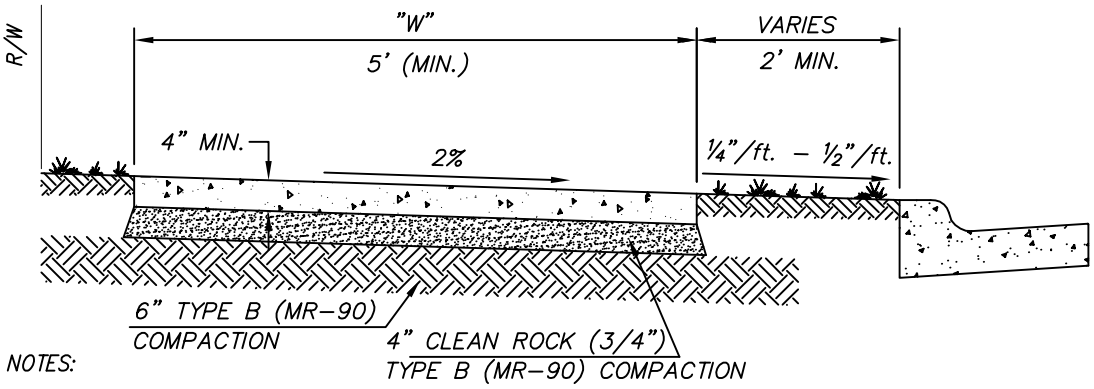

NOTES:

1. TOOLED JOINTS SHALL BE PLACED "W" CENTERS.
2. EXPANSION JOINTS SHALL BE PLACED AT 250' CENTERS AND WHERE WALK ABUTS EXISTING CONCRETE.
3. ALL CONCRETE SHALL BE KCMMB4K.
4. ALL SIDES OF EACH PANEL SHALL HAVE A 3" "PICTURE FRAME" EDGING, UNLESS OTHERWISE APPROVED OR NOTED ON THE PLANS.
5. WHEN UTILITY SERVICE BOXES, METER BOXES, ETC. WHICH MEASURE LESS THAN 1 FT. SQUARE MUST BE PLACED IN THE SIDEWALK, THE UTILITY SERVICE BOXES, ETC. SHALL BE NO CLOSER TO ANY EDGE OF THE SIDEWALK PANEL THAN 1 FT.
6. WHEN UTILITY BOXES, METER BOXES, ETC. GREATER THAN 1 FT. IN ANY DIMENSION MUST BE PLACED IN THE SIDEWALK, THEY SHALL BE PLACED IN THE CORNER OF THE SIDEWALK PANEL. IN ADDITION, FLOWABLE FILL SHALL BE USED AS BACKFILL FOR THESE STRUCTURES AND SHALL EXTEND TO UNEXCAVATED GROUND.
7. AN ISOLATION JOINT SHALL BE PLACED BETWEEN THE CONCRETE AND ANY UTILITY BOX, ETC. WHICH IS PLACED IN THE SIDEWALK.
8. NO SECTION OF SIDEWALK LESS THAN 12" IN ANY DIMENSION.
9. CLEAN ROCK (¾") SHALL BE USED WHERE SIDEWALK IS PLACED LESS THAN 100' IN A CONTINUOUS LENGTH AND WHERE SIDEWALK IS PLACE AS PART OF A BUILDING PERMIT FOR A SINGLE FAMILY OR MULTI-FAMILY UNIT.
10. IT IS THE CONTRACTORS RESPONSIBILITY TO CONSTRUCT SIDEWALK PER ADA REQUIREMENTS.
11. REFER TO SECTION 4405 FOR CURING REQUIREMENTS.
12. CLEAN ROCK (¾") MAY BE SUBSTITUTED WITH AB-3 TYPE B (MR-90) COMPACTION.

TYPICAL SIDEWALK

Date	Revision	By	Appr.
6-5-23	UPDATED CITY BRAND	BPS	LKS
7-27-22	SHAWNEE DESIGN & CONSTRUCTION MANUAL REVISIONS	JTR	LKS
11-04-21	PUBLIC INPUT COMMENTS	KTF	LKS
1-12-21	SHAWNEE DESIGN & CONSTRUCTION MANUAL REVISIONS	JTG	LKS
8-24-20	SHAWNEE DESIGN & CONSTRUCTION MANUAL REVISIONS	JAR	LKS
3-1-14	SHAWNEE DESIGN & CONSTRUCTION MANUAL REVISIONS	MRS	PJL

TYPICAL SIDEWALK

PUBLIC WORKS

Shawnee KANSAS

DATE:	08-27-2007	3225-1
DRAWN BY:	MRS	
CHECKED BY:	PJL	SHEET 1 OF 1

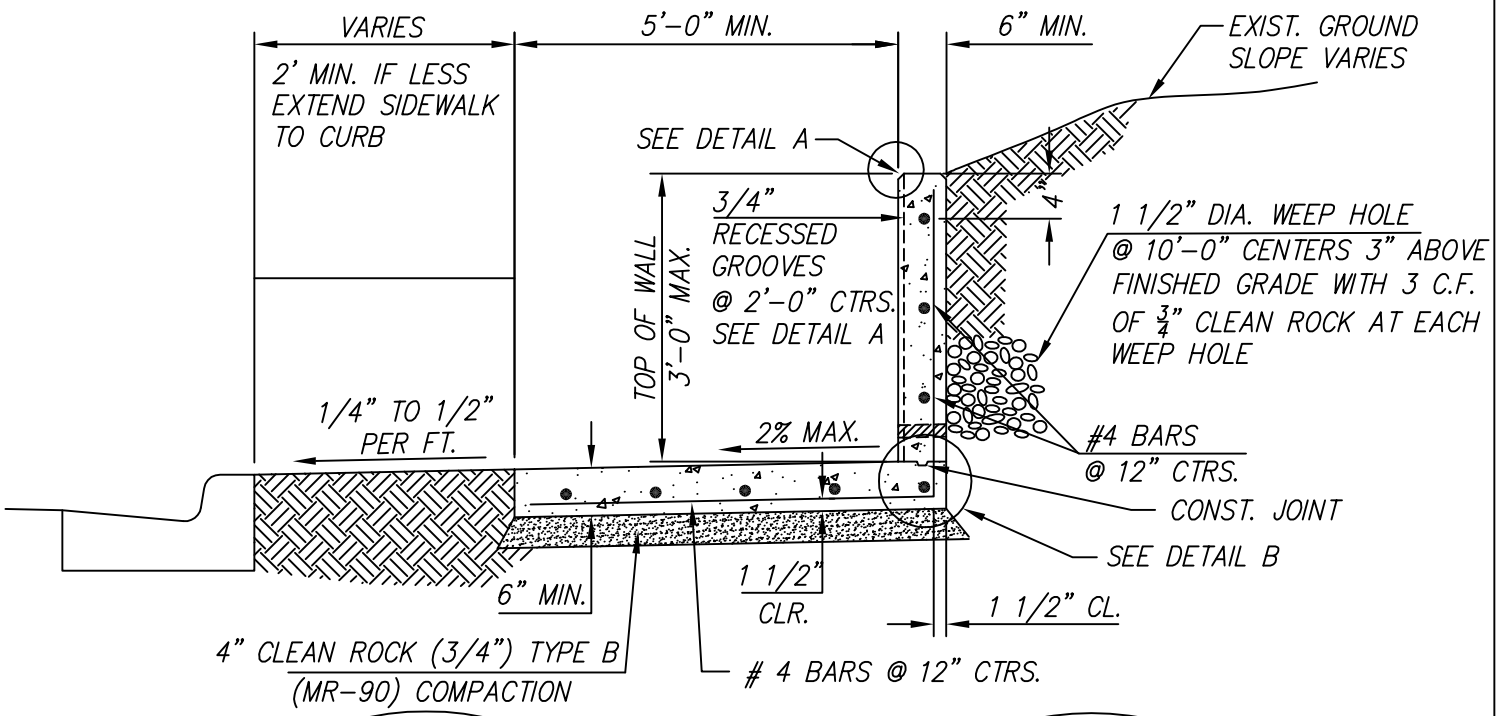

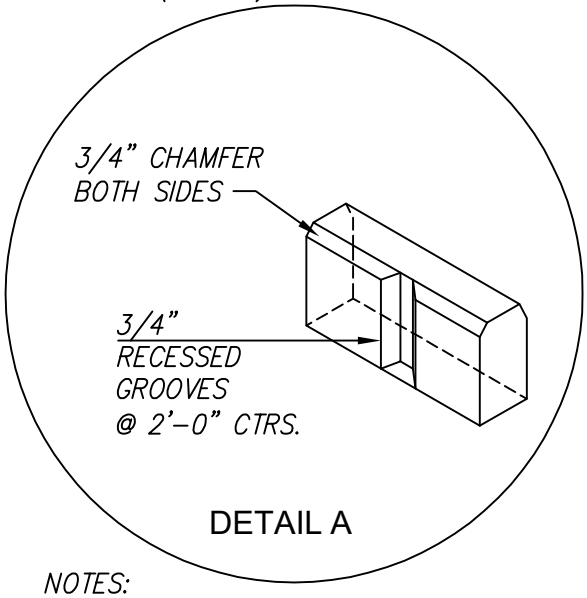

DETAIL A

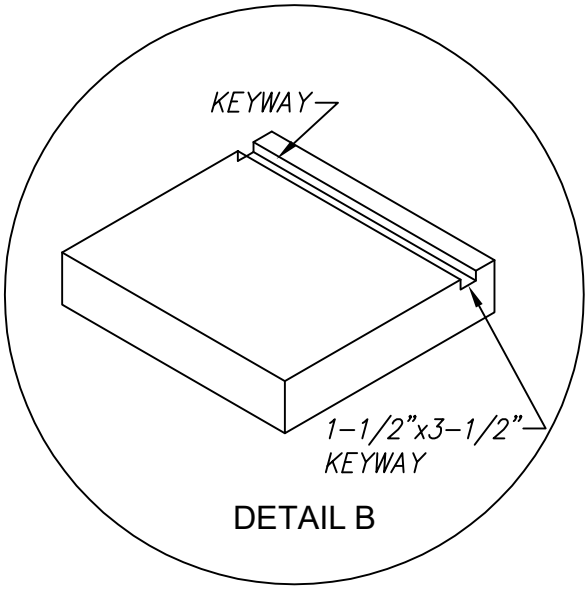

DETAIL B

NOTES:

1. 1/2" PREMOULDED EXPANSION JOINTS SHALL BE PLACED AT POINTS OF CURVATURE, CURB RETURNS, CURB INLETS, AND 250' CENTERS. CONTRACTION JOINTS SHALL BE 1 1/2" DEEP AND PLACED AT 10' INTERVALS EQUALLY SPACED BETWEEN EXPANSION JOINTS. KCMMB5K CONCRETE SHALL BE USED THROUGHOUT, FOR SIDEWALK AND WALL.
2. CLEAN ROCK (3/4") MAY BE SUBSTITUTED WITH AB-3 TYPE B (MR-90) COMPACTION

INTEGRAL SIDEWALK & RETAINING WALL

Date	Revision	By	Appr.
6-6-23	UPDATED CITY BRAND	BPS	LKS
7-26-22	SHAWNEE DESIGN & CONSTRUCTION MANUAL REVISIONS	JTR	LKS
7-14-20	SHAWNEE DESIGN & CONSTRUCTION MANUAL REVISIONS	JAR	LKS
3-1-14	SHAWNEE DESIGN & CONSTRUCTION MANUAL REVISIONS	MRS	PJL
8-21-12	SHAWNEE DESIGN & CONSTRUCTION MANUAL REVISIONS	MRS	PJL

INTEGRAL SIDEWALK & RETAINING WALL DETAILS

PUBLIC WORKS

Shawnee KANSAS

DATE:	08-27-2007	3625-2
DRAWN BY:	MRS	
CHECKED BY:	PJL	SHEET 1 OF 1

CONSTRUCTION ON OR ADJACENT TO SLOPES

The following regulations apply to foundations that are close to slopes steeper than 1 unit vertical in 3 units horizontal (33% slopes). Close is defined as footings that are not setback from the face of the slope a distance equal to or greater than 1/3 the height of that slope.

- Excavation spoils shall not be pushed down the slope without special inspection to verify proper preparation (benching), and placement of fill, as described by the 2018 International Building Code. (NOTE: This provision applies to fill on any lot with existing grades steeper than 1 vertical in 5 horizontal.)
- The footing design, and the foundation wall design shall be reviewed and approved by a KS registered engineer.
- The footing installation, and the foundation wall installation shall be inspected and approved by a KS registered engineer.
- The placement of backfill deeper than 24 inches within the foundation walls shall be approved by a KS registered engineer, or all slabs within the building shall be structural slabs designed, inspected and approved by a KS registered engineer.
- Under slab plumbing shall be supported by approved engineered backfill, or by attachment to the structural slab.
- The final grades and slope stabilization treatment shall be inspected and approved by a KS registered engineer or landscape architect.

Re: 2018 International Residential Code Section R403.1.7.

STEEP SLOPE LOTS BUILDING PERMIT CONDITIONS OF APPROVAL

1. The footing installation and the foundation wall installation shall be inspected and approved by a qualified KS registered design professional.

2. The placement of backfill deeper than 24 inches within the foundation walls shall be inspected and approved by a qualified KS registered design professional. As an alternate, slabs that are constructed on backfill deeper than 24 inches within the foundation walls shall be structural slabs, designed, inspected and approved by a qualified KS registered design professional.

3. Under slab plumbing shall be supported by approved engineered backfill, or by attachment to the structural slab. A report and inspection of the backfill by a KS registered design professional is required.

Satisfactory reports prepared by the responsible design professional for items 1., 2., and 3. above shall be submitted to the Building Codes offices **prior to obtaining an under slab plumbing inspection.**

4. Excavation spoils shall not be pushed down the slope without special inspection by a qualified KS registered design professional to verify proper preparation (benching), and placement, and compaction of fill, as described by the 1997 UBC Appendix Chapter 33, Section 3313. (NOTE: This provision applies to fill on any lot with existing grades steeper than 1 vertical in 5 horizontal.) The final grades and slope stabilization treatment shall be inspected and approved by a KS registered design professional.

Satisfactory reports, prepared by the responsible design professional for item 4. above, shall be submitted **prior to obtaining any occupancy. (**Re: 2018 International Residential Code Section R403.1.7.4 and Shawnee Municipal Code Section 11.20.060.)

I have read and agree to comply with the above listed building permit conditions of approval.

_____ _____

Signature Date

Building Permit # _____

Summary of General Bulk Regulations

Zoning Designation	Primary Use	Front Setback	Side Setback	Rear Setback	Lot Area	Lot Frontage	Height Limit	Building Coverage	Ordinance Location
AG	Agricultural Holding Zone, Farming	50 feet	30 feet(a)	50 feet	5 acres(b)/ 80,000(ft)2	200 feet	45 feet/ 3 story	NA	17.10
RE	Residential Estates	50 feet	25 feet(c)	50 feet/ 40 feet(d)	1ac/sewer 2 ac/septic	160 feet	45 feet/ 3 story	NA	17.12
RS	Residential Suburban	35 feet	15 feet	35 feet/ 40 feet(e)	12,000(ft)2	90 feet	45 feet/ 3 story	NA	17.16
R-1	Single Family Residential	30 feet	20% Lot Width 7 feet min	30 feet/ 40 feet(f)	9,000(ft)2	75 feet	45 feet/ 3 story	NA	17.20
PSF	Planned Single Family (4 acres min.)	25 feet(g)	Varies (See Plat File)	Varies (See Plat File)	6600(ft)2(h)	1/3=60'-65' 1/3>70 feet	45 feet/ 3 story	Max. 50%, Max.5du/a	17.23
DU	Duplex Residential	30 feet	10 feet	30 feet	12,000(ft)2	90 feet	45 feet/ 3 story	NA	17.24
PO	Professional Office	30 feet/ 75' (hotel), 30' (parking)	20 feet(!) / 50' (hotel), 30' (parking)	35 feet / 75' (hotel) 30' (parking)	10,000(ft)2	100 feet/ 200' (hotel)	45 feet	NA	17.34
CN	Commercial Neighborhood	40 feet 15' (parking)	Zero / 20' adjacent to Resident.	25 feet 15' (parking)	3 acres	50 feet	45 feet	NA	17.38
CH	Commercial Highway	30 feet/ 75' (hotel), 20' (parking)	Zero / 50' (hotel), 20' adjacent to Resident.	25 feet 75' (hotel) 20' (parking)	10,000(ft)2	100 feet/ 200' (hotel)	45 feet	NA	17.42
TSQ	Townsquare District	20 feet/ 75' (hotel), 10' (parking)	Zero / 50' (hotel), 20' adjacent to Resident.	20 feet/ 75' (hotel)' 10' (parking)	none	40 feet(j)	45 feet	NA	17.45
PI	Planned Industrial (20 acres min.)	50 feet 20' (parking)	25 feet/ 50' adjacent to Highway/ 100' adjacent to Resident.	25 feet/ 50' adjacent to Highway/ 100' adjacent to Resident.	none	100 feet	75 feet	NA	17.46
PMR (PUD)	Planned Mixed Residential (4ac.min.)	See 17.54.21	See 17.54.21	See 17.54.21	17.54.20	17.54.20	17.54.20	17.54.20	17.54
POC (PUD)	Planned Office Commercial(5ac.min.)	See 17.54.23	See 17.54.23	See 17.54.23	17.54.22	NA	17.54.22	NA	

(a)Both side yards in combination must measure at least 100 feet
(b)For single family residential and agricultural uses
(c)Both side yards in combination must measure at least 75 feet
(d)50 feet for SFR, 40 feet for other Permitted Uses and SUPs
(e)35 feet for SFR, 40 feet for other Permitted Uses and SUPs
(f)30 feet for SFR, 40 feet for other Permitted Uses and SUPs
(g)One front yard setback on a corner lot may platted as side yard setback of 20 feet
(h)With density/lot size transitions to adjacent residential
(!)Both side yards in combination must measure at least 50 feet
(j) See ordinance for other related frontage requirements

Community Development

Building Codes Division

BUILDING PERMIT FEE SCHEDULE

VALUATION ($)	FEE ($)	VALUATION ($)	FEE ($)	VALUATION ($)	FEE ($)
0 - 500	20.00	24,001 - 25,000	257.00	62,001 - 63,000	497.00
501 - 600	22.00	25,001 - 26,000	264.00	63,001 - 64,000	502.00
601 - 700	24.00	26,001 - 27,000	271.00	64,001 - 65,000	507.00
701 - 800	26.00	27,001 - 28,000	278.00	65,001 - 66,000	512.00
801 - 900	28.00	28,001 - 29,000	285.00	66,001 - 67,000	517.00
901 - 1,000	30.00	29,001 - 30,000	292.00	67,001 - 68,000	522.00
1,001 - 1,100	32.00	30,001 - 31,000	299.00	68,001 - 69,000	527.00
1,101 - 1,200	34.00	31,001 - 32,000	306.00	69,001 - 70,000	532.00
1,201 - 1,300	36.00	32,001 - 33,000	313.00	70,001 - 71,000	537.00
1,301 - 1,400	38.00	33,001 - 34,000	320.00	71,001 - 72,000	542.00
1,401 - 1,500	40.00	34,001 - 35,000	327.00	72,001 - 73,000	547.00
1,501 - 1,600	42.00	35,001 - 36,000	334.00	73,001 - 74,000	552.00
1,601 - 1,700	44.00	36,001 - 37,000	341.00	74,001 - 75,000	557.00
1,701 - 1,800	46.00	37,001 - 38,000	348.00	75,001 - 76,000	562.00
1,801 - 1,900	48.00	38,001 - 39,000	355.00	76,001 - 77,000	567.00
1,901 - 2,000	50.00	39,001 - 40,000	362.00	77,001 - 78,000	572.00
2,001 - 3,000	59.00	40,001 - 41,000	369.00	78,001 - 79,000	577.00
3,001 - 4,000	68.00	41,001 - 42,000	376.00	79,001 - 80,000	582.00
4,001 - 5,000	77.00	42,001 - 43,000	383.00	80,001 - 81,000	587.00
5,001 - 6,000	86.00	43,001 - 44,000	390.00	81,001 - 82,000	592.00
6,001 - 7,000	95.00	44,001 - 45,000	397.00	82,001 - 83,000	597.00
7,001 - 8,000	104.00	45,001 - 46,000	404.00	83,001 - 84,000	602.00
8,001 - 9,000	113.00	46,001 - 47,000	411.00	84,001 - 85,000	607.00
9,001 - 10,000	122.00	47,001 - 48,000	418.00	85,001 - 86,000	612.00
10,001 - 11,000	131.00	48,001 - 49,000	425.00	86,001 - 87,000	617.00
11,001 - 12,000	140.00	49,001 - 50,000	432.00	87,001 - 88,000	622.00
12,001 - 13,000	149.00	50,001 - 51,000	437.00	88,001 - 89,000	627.00
13,001 - 14,000	158.00	51,001 - 52,000	442.00	89,001 - 90,000	632.00
14,001 - 15,000	167.00	52,001 - 53,000	447.00	90,001 - 91,000	637.00
15,001 - 16,000	176.00	53,001 - 54,000	452.00	91,001 - 92,000	642.00
16,001 - 17,000	185.00	54,001 - 55,000	457.00	92,001 - 93,000	647.00
17,001 - 18,000	194.00	55,001 - 56,000	462.00	93,001 - 94,000	652.00
18,001 - 19,000	203.00	56,001 - 57,000	467.00	94,001 - 95,000	657.00
19,001 - 20,000	212.00	57,001 - 58,000	472.00	95,001 - 96,000	662.00
20,001 - 21,000	221.00	58,001 - 59,000	477.00	96,001 - 97,000	667.00
21,001 - 22,000	230.00	59,001 - 60,000	482.00	97,001 - 98,000	672.00
22,001 - 23,000	239.00	60,001 - 61,000	487.00	98,001 - 99,000	677.00
23,001 - 24,000	248.00	61,001 - 62,000	492.00	99,001 - 100,000	682.00

Building Permit fee for valuations of $100,001 to $500,000:

- $682.00 for the first $100,000 plus $4 for each additional $1,000 or fraction thereof up to $500,000

Building Permit fee for valuations of $500,001 or more:

- $2,282 for the first $500,000 plus $3 for each additional $1,000 or fraction thereof

Plan Review Fees: When commercial building plans must be submitted, a plan review fee shall be paid at the time of submitting such plans and specifications for review. The plan review fee is in addition to the building permit fee.

Description	Charge
• Plan Review Fee	65% of Permit Fee
• Additional plan review required by changes, additions or revisions to approved plans (two hour min)	$50/hour

For complete fee information, please review City of Shawnee Comprehensive User Fee Schedule PS-56 (Effective 1/1/2020)

This permit expires if work authorized is not started within six months or if no inspection is obtained in any six-month period. This permit expires two years after the date it is issued. The following is a list of required inspections during construction with the City of Shawnee, Kansas. Call 913.742.6010 for inspections. No same day inspections accepted after 2:00 pm.

RESIDENTIAL (SINGLE FAMILY)	NOTICE
Footings	2 hours
Foundation Walls	2 hours
Ground Rough (Under-slab plumbing electrical, HVAC)	2 hours
Rough-In	1 day
Electrical Service	1 day
Water Resistive Barrier (WRB)	1 day
Insulation	½ day
Gas Pressure Test	½ day
Drive Approach	Contact 913.406.1237
Final Inspection	1 day
DECKS	
Footings and ledger/Rim	2 hrs
Final Inspection	1 day
POOLS	
Bonding (Underground Pools)	2 hours
Gas Pressure Test	½ day
Ground Rough Electrical	½ day
Final Inspection	1 day
COMMERCIAL	
Footings	2 hours
Foundation Walls	2 hours
Electrical Service	1 day
Ground Rough Plumbing (air or water test)	2 hours
Ground Rough Electrical	2 hours
Structural Frame	1 day
Fire Sprinkler (pressure of flow test)	Contact 913.631.6100
Top Rough Plumbing (air or water test)	½ day
Rough-In (framing, plumbing, electrical, HVAC)	1 day
Insulation	½ day
Sheetrock (fire rated construction)	1 day
Final Inspection	1 day
RESIDENTIAL BASEMANT FINISH	
Ground Rough (Under-slab plumbing electrical, HVAC)	2 hours
Rough-In (framing, plumbing, electrical, HVAC)	1 day
Insulation	½ day
Final Inspection	1 day
ACCESSORY USES	
Footings	2 hours
Ground Rough (Under-slab plumbing electrical, HVAC)	2 hours
Rough-In	1 day
Final Inspection	1 day